World Scientific Research Journal (WSRJ) ISSN: 2472-3703
www.wsr-j.org

Circuit Design of Two wheel Selfbalancing Cars

Yanliang Zhang[a], Lei Zhao[b]

School of Physics and Electrical Information Engineering, Henan Polytechnic University,

Jiaozuo 454001, China

[a]ylzhang1199@foxmail.com, [b]zhaolei@foxmail.com

Abstract: The two-wheel self-balancing car system is a two-wheeled parallel arrangement. Liking a traditional inverted pendulum, It is a natural unstable body, and must be imposed strong control means to make it stable. This paper uses the attitude sensor (gyroscope, accelerometer) to monitor the body in which the pitch state and state change rate. And then through the MCU (Microcontroller Unit) to calculate the appropriate data and instructions, the drive motor to produce forward or backward acceleration to achieve the effect of the body before and after the balance.
Keywords: Two-wheel self-balancing car, Microcontroller Unit, Motor, Circuit Design

---

1. INTRODUCTION

Mobile robots are an important branch of robotics. The distinguishing feature of the two-wheeled self-balancing robot is that it uses two rounds of coaxial and independent drive modes of operation. The center of gravity of the body is located above the wheel shaft, through the wheel before and after the move to maintain the balance of the body. And it is also able to travel in an upright balance. It can be competent in a complex environment to complete the work.

Since the two-wheeled self-balancing vehicle has been popular among national enthusiasts and researchers [1]. As early as 1987, the Japanese telecommunications university professor Shan Teng a male on the proposed two-wheeled self-balancing robot concept. This basic concept is discussed below. It uses a digital processor to detect a balanced change, and then keep the machine smooth with parallel wheels [2].

2. OVERALL CIRCUIT DESIGN

The design uses STM32F103 microcontroller, through software filtering and automatic control theory algorithm makes the car to achieve equilibrium. The sensor of the system uses the MPU6050 six-axis sensor with accelerometer and gyroscope to collect the acceleration and

angular velocity of the car body. The system uses the Kalman filter algorithm to combine the two to obtain the car attitude angle. The system uses the PID closed-loop control algorithm to drive the motor via the TB6612FNG integrated driver chip. It interacts with the car via mobile phone Bluetooth. These reliable hardware and software design, making the entire hardware structure and software systems can be a smooth match, so that the car can maintain an upright self-balancing state.

For the car, in order to achieve balance, we need to constantly collect the sensor data and fusion to determine the car posture. The motor speed will be real-time feedback to the microcontroller, and by adjusting the PWM and motor reversal to control the balance of the car. And then in the mobile phone through the Bluetooth and single-chip to communicate, so as to achieve the purpose of interactive control with the car.

The overall circuit of the car mainly includes power supply circuit, single chip main control circuit, MPU6050 sensor circuit, TB6612FNG motor drive circuit and other peripheral circuits. Each module circuit is inseparable, but each has a different division of labor. So that it ensures the stable operation of the system. System hardware block diagram shown in Figure 1.

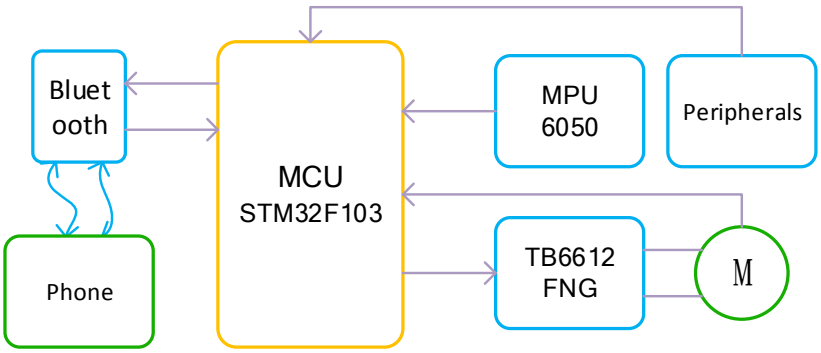

Fig. 1 Block Diagram of System

3. POWER SUPPLY CIRCUIT DESIGN

As the system involves the motor drive and Bluetooth communication circuit. The two work at the same time, the working current is relatively large. For the safety of the entire circuit, select the rated current and the smaller voltage regulator chip LM2596 to get +5 V voltage. + 3.3V voltage is regulated by AMS1117.

The entire system requires three power supplies, including a + 12V power supply for driving the motor, a + 5V power supply for Bluetooth and motor driver chip logic, and a + 3.3V power supply for MCU and MPU. So choose the 3S model lithium hybrid battery-powered, and then after two buck and regulator to obtain the required +5 V, +3.3 V voltage. LM2596 regulator circuit used to get +5 V voltage, the circuit shown in Figure 2. AMS1117 regulator circuit for obtaining +3.3 V voltage, the circuit shown in Figure 3.

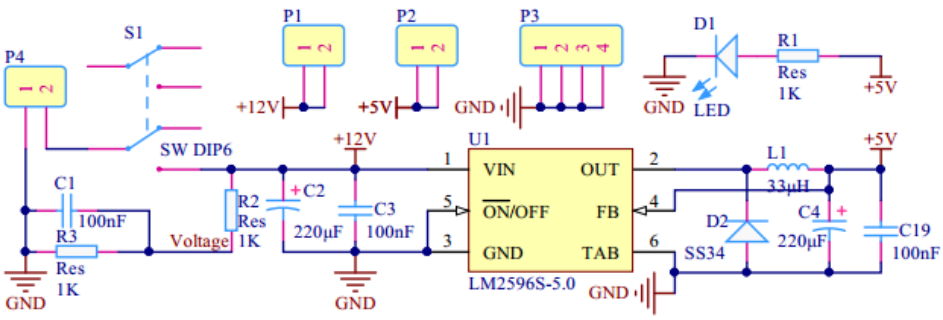

Fig. 2 Voltage regulator circuit of LM2596

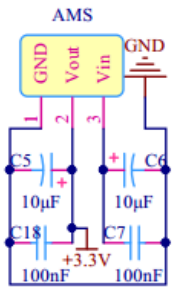

Fig. 3 Voltage regulator circuit of AMS1117

4. DESIGN OF MAIN CONTROL CIRCUIT OF SINGLE CHIP MICROCOMPUTER

As the system requires more peripherals and faster computing speed, so the system uses STMicroelectronics (STMicroelectronics) produced STM32F103C8T6. Its core is Cortex-M3, the operating frequency can be as high as 72MHz.

STM32F103 has a high degree of integration, only need a few peripheral circuits to work. According to the need to design the smallest system circuit shown in Figure 4. It mainly includes power supply filter, crystal oscillator circuit, LED indicator circuit, BOOT selection, reset circuit and so on. Power supply filter circuit can further increase the stability of the power supply to reduce the impact of the burr on the microcontroller. Crystal oscillator circuit contains two, respectively, the oscillation frequency of 8MHz and 32768Hz oscillation circuit. 8MHz oscillator circuit for the microcontroller to provide a stable external oscillation clock, through the internal PLL multiplier to 72MHz, and then the internal and then according to the rate of each peripheral through the various bus frequency into different frequencies. The 32768Hz oscillator circuit is used for internal RTC real-time clocks. LED indication circuit is used to indicate the working state of the circuit; BOOT is selected for selecting the program start mode. The reset circuit is used to reset the program.

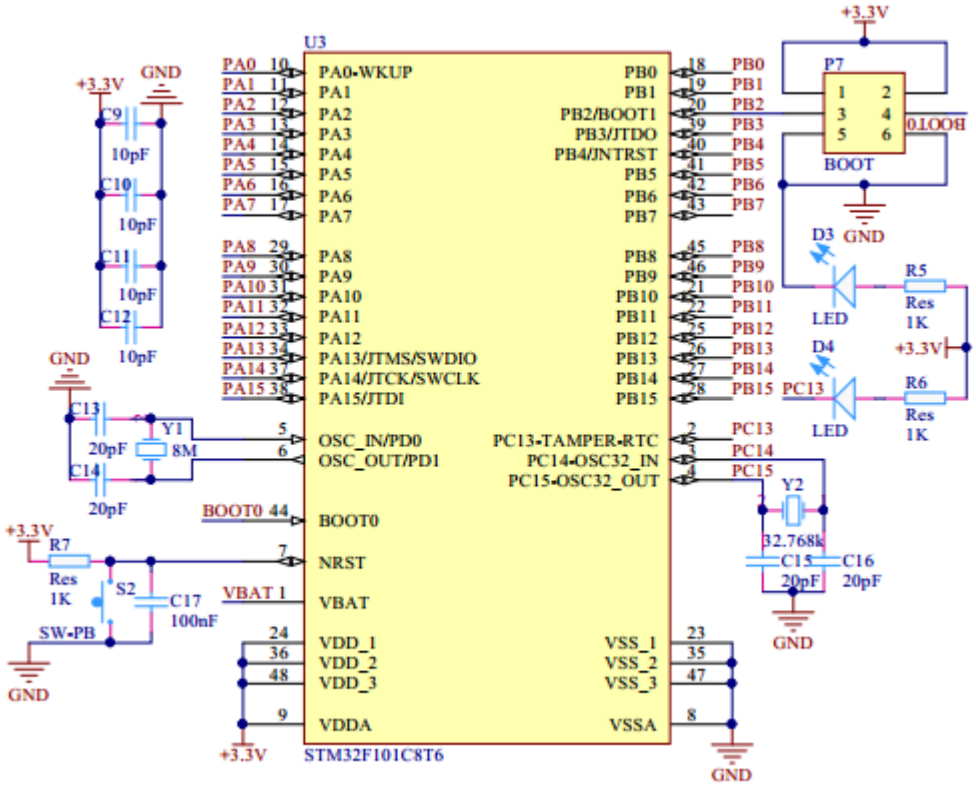

Fig. 4 Minimum system circuit of STM32F103

5. CONCLUSION

In the hardware circuit design, we use the Altium Designer, which has a friendly work interface and mode of operation. Altium Designer is Altium's integrated electronic product development system, mainly running on the Windows operating system. The software combines designers with schematic design, circuit simulation, PCB drawing editing, topology logic autorouting, signal integrity analysis, and design output to provide designers with a new design solution that makes it easy for designers To design. Designers skilled use of this software will make the circuit design quality and efficiency greatly improved.

ACKNOWLEDGEMENTS

I would like to express my gratitude to the support of the Fundamental and Advanced Research Project of Henan Province [132300410461], the Doctoral Scientific Funds of Henan polytechnic University [B2012-100] and the Fundamental Research Funds for the Universities of Henan Province [NSFRF140125].

REFERENCES

[1] LAI Xuzhi, CAI Zixing, WU Min, et al. Fuzzy control strategy for the ac-robot. Control

Theory and Applications, 2000.1

[2] SHUNICHI miyagishi, Ichiro Kageyama, KOUHEI takama, et al. Studyon construction of a rider robot for two-wheeled vehicle. JSAE Review, 2003.2