World Scientific Research Journal (WSRJ) ISSN: 2472-3703
www.wsr-j.org

Design of peanut shell removal device

Ruyuan Qiu [a], Jialei Li [b], Liangmeng Zhang [c], Ruifeng Cao

College of Mechanical and Electronic Engineering, Shandong University of Science and Technology, Qingdao 266590, China.

[a] 240371902@qq.com, [b]924507555@qq.com, [c]1730369581@qq.com

---

Abstract: The peanut shelling device is mainly used for shelling the dried peanuts in the early stage of food production. The peanuts that have been air-dried are poured into a peeled hopper and rubbed to remove the shells. After passing through the separating device, the rice is automatically separated and discharged. The dehulling device of this design is to use the frictional shelling method to peel the peanut kernels and the like nuts. Its characteristics: small machinery, simple structure; easy to manufacture, easy to operate, low cost; low requirements for production conditions. The selection of the shell and the selection of the motor, the selection and verification of the shaft, the calculation of the motion parameters and the dynamic parameters of the transmission, the structural design and arrangement, the strength check and the selection of the sealing device, so that the shell is removed The device has stable operation, low cost, and easy maintenance. The machine will be widely used in the initial processing of peanut raw materials or in the processing of food, peanut fresh vegetables, beverage products and peanut milk.
Keywords: shell removal device, friction shelling method, structural design and layout, gear design calculation.

---

1. INTRODUCTION

The scraper-type peanut sheller combines the advantages of the various peanut shelling machines described above and uses four scrapers. The efficiency of shelling is greatly improved. In addition, it has the advantages of low breakage rate and high net removal rate. In summary, the use of scraper peanut sheller is more reasonable [1].

2. OVERALL DESIGN OF PEANUT SHELLER

2.1 Scraper peanut shelling device structure

The design process is from the top down, starting from the peanut packing, the top is the collection hopper, the bottom of the collection hopper is the shell, the collection hopper can be designed as a whole with the shell, the bottom is the peanut shell and peanut separation Device. In the shelling box, the peanuts must go through the impact and squeezing action of the scraper

to remove the shells. Therefore, the scraper design is placed in the shelling box. After the peanuts are shelled by the impact and squeezing of the squeegee, they pass through the grid located at the bottom of the husking box, so that the grid can be designed as a semi-circular cage, which is fixed in the lower half box of the husking box. The shelled peanut kernels and peanut shells pass through the grid and fall through the outlet at the bottom of the shelling box. During the falling process, a blower inlet is designed to separate the shelled peanut shells from the peanut kernels. The peanuts with slightly heavier weight are not blown away by the wind, but the lighter weight peanut shells are blown into the peanut shell collection channel by the airflow blown by the fan. The bottom of the channel is designed to have a certain degree of inclination so as to facilitate Peanuts use natural gravity to slide down. The separated peanuts fall and fall into the peanut kernel collection channel. This channel is designed as a whole with the bottom surface of the peanut shell collection channel. This design allows peanuts that have not been blown off the wind to fall back through their own weight. Roll to the peanut collection channel[2][3]

In order to ensure the installation of all parts of the whole machine, a rack needs to be designed. The rack plays a role of supporting, positioning and connecting several other parts. The motor is installed inside the rack, and the peeling part and the hopper are installed in the rack. Above the rack, shell and shell separators are installed below the rack. The design of the rack must not only be aesthetically pleasing but also have sufficient stability to ensure effective connection between the various components. Its structure diagram is shown in Figure 2-1

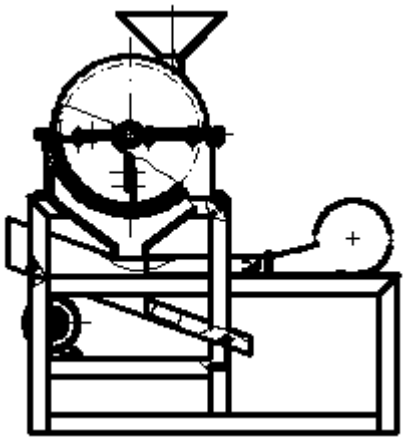

Fig. 2-1 Structure of scraper peanut sheller

3. STRUCTURE DESIGN OF MAIN COMPONENTS OF SCRAPER PEANUT SHELLER

3.1 Design of Feed Port Capacity

3.2 Design dimension of the box

The role of the box is to provide a closed shelling environment for the scraper and to support and position the associated structure. The design of the box must not only be aesthetically pleasing, but also reduce manufacturing costs.

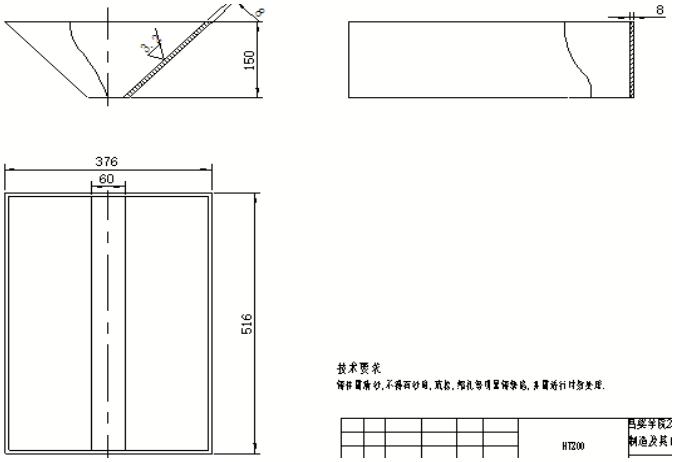

Fig. 3-1 Three-dimensional shape of hopper

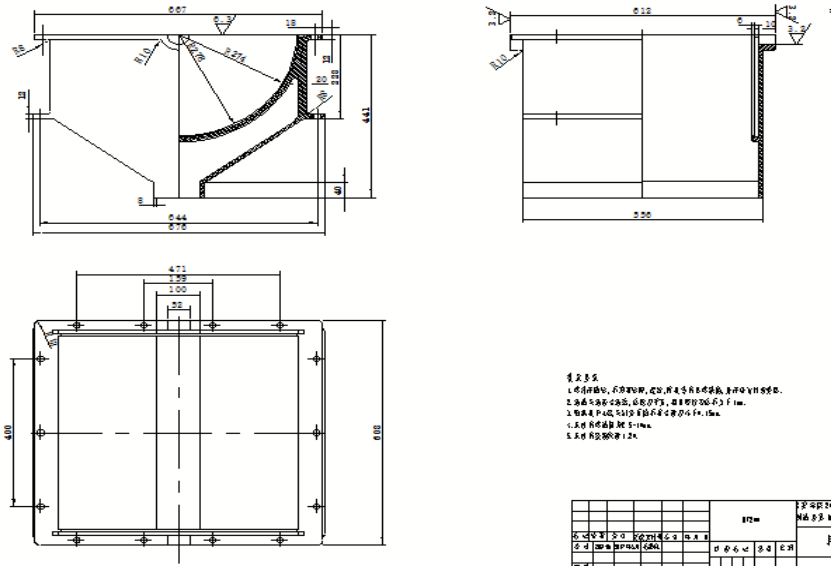

Fig.3-2Three-dimensional view of the box

The 3D illustration of the cover is shown in Figure 3-3.

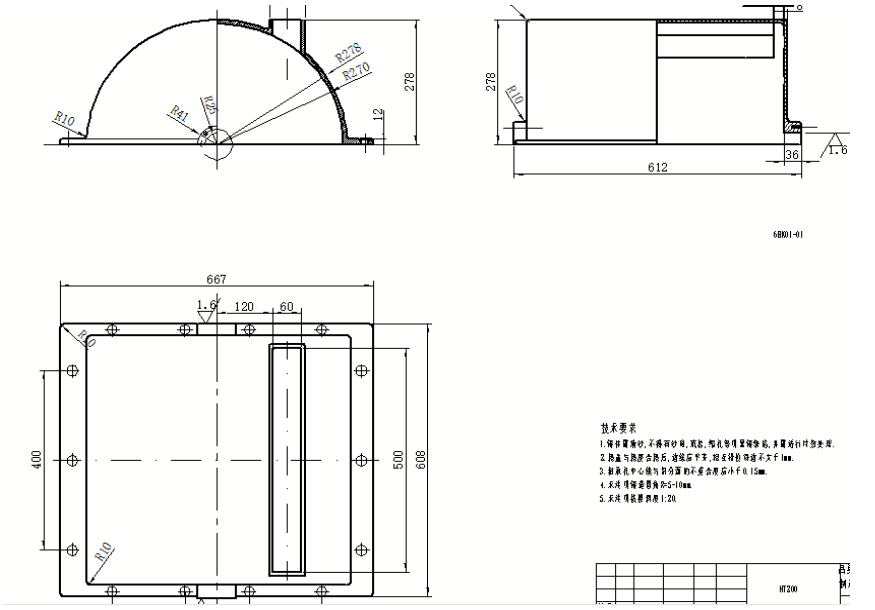

Fig.3-3 3D view of the lid

3.3 Rack Design

The whole frame is welded by angle steel, and plays the role of supporting, positioning, and connecting of several other parts. The motor is installed inside the frame. The shelling machine is installed on the rack, and the connection is connected by ordinary bolts. The structural design of the rack not only requires a beautiful appearance, but also has stable characteristics. The frame is formed by casting. For the specific structure, see the general assembly drawing of peanut peeled shell [4] [5]

3.4 Accessories for scraper peanut sheller

Scraper peanut sheller accessories include bearing end caps, blower tubes, collector plates, peanut shell outlets, and air volume adjustment devices. There are two bearing end caps, which are respectively installed on the two ends of the shaft, and the material is HT200. It can prevent the bearings on the shaft from moving left and right, and can play the role of positioning. It is installed at the junction of the box seat and the box cover, using four. The root screw is fixed on the box seat and the box cover. There are washers between the bearing end cover and the box seat and the box cover, which can play the role of shockproof and fastening. The air blower is a passageway for blower blower. It is made of 45 steel, and at its inlet there is an air volume adjustment device, which can adjust the air volume according to the speed of falling peanuts. Its inlet is connected with the blower. The outlet is connected with the peanut shell outlet and the peanut outlet. Since the peanut shell is lighter, the wind can be blown out of the peanut shell outlet. However, if the peanut is heavier, it will slide naturally from the hub plate, and the peanut shell outlet and set. Renban is made of 45 steel. The specific structure is shown in Figure 3-4

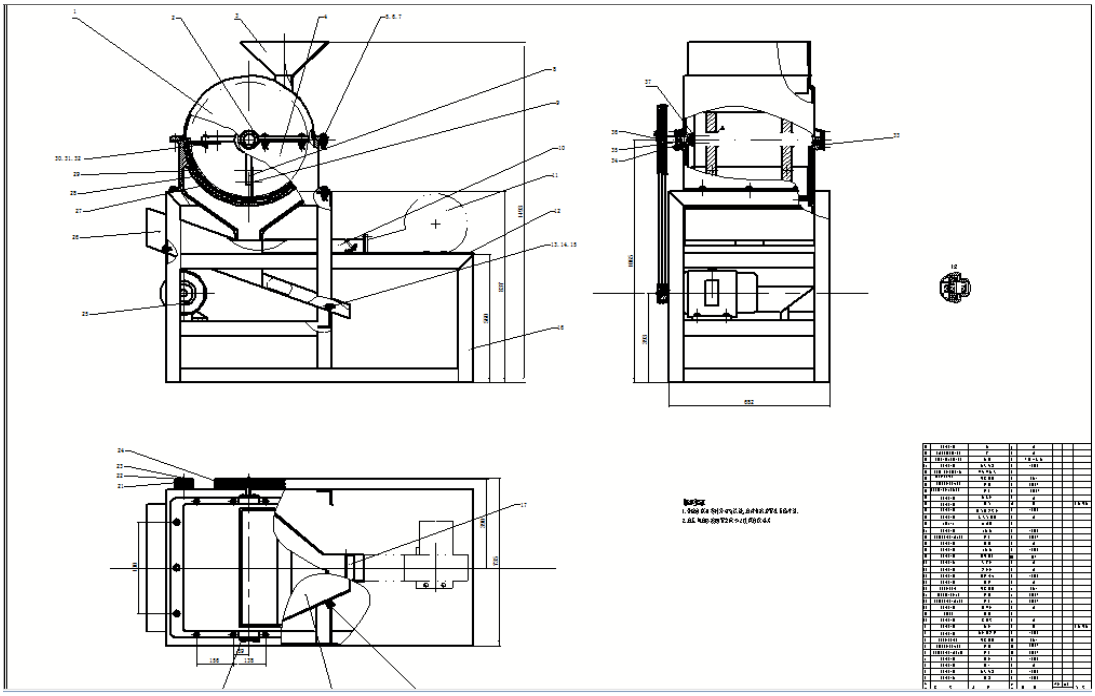

Fig.3 -4Assembly of Peanut Sheller

REFERENCES

[1] Xianzhen Meng. Peanut sheller design and test [J]. Foreign agricultural machinery, 1980.
[2] China Academy of Agricultural Mechanization. Agricultural Machinery Design Handbook (Volume 1) [M]. Beijing: Mechanical Industry Press, 1990.
[3] Xiaopeng Zhang, Jiayu Zhang. Effect of different components of peanut sheller on the shelling performance of peanut [J].Journal of Laiyang Agricultural College, 1990, 7.
[4] Yibing Shi. Food Machinery and Equipment [M]. Beijing: China Business Press, 1992.6
[5] Zhengrong Xie. Research on Cultivation Characteristics and Complementary Technology of Directly Harvested Rice[J]. China Rice, 1996.