World Scientific Research Journal (WSRJ) ISSN: 2472-3703
www.wsr-j.org

Research on Operation Mode of Microgrid Connection

Xin Qiao *

Department of Electrical Power Engineering, North China Electric Power University, Baoding 071000, China.

*931621593@qq.com

Abstract: This paper introduce the basic concept, structure of the micro-grid and the special problems in the grid-connected network. The single-network and dual-network and micro-grid networks and their structures were proposed and compared. The application example simulates and analyzes the causes of the microgrid bus voltage and the change of the whole network frequency when the PCC point short-circuit fault and the microgrid load power randomly fluctuate under two different grid-connected modes, indicating that the grid needs to select the appropriate grid connection method according to the actual situation. From the perspective of improving the reliability of the system, suggestions have been made for the improvement of the single-network and grid-connected methods.
Keywords: microgrid, case study, simulation.

---

1. INTRODUCTION

In recent years, with the continuous development of the power system, the power generation mode has become more polarized. On the one hand, the power supply is concentrated in regions where the demand for electricity is large and the load is relatively high. On the other hand, it is used in regions with relatively scattered loads and clean energy sources. The distributed power generation has less pollution, flexible power generation methods, high energy utilization, and flexible installation locations. Compared with centralized power generation, it saves power transmission and distribution resources and operating costs, and reduces the loss of concentrated power transmission lines. Distributed generation can reduce the total capacity of the grid, improve the peak-to-valley performance of the grid, and improve the reliability and flexibility of the system's power supply. We call the system based on distributed generation and load micronets.

2. CONCEPT OF MICRONET

The basic definition of microgrid in the world is: The microgrid is a collection of distributed power/micro power supplies, energy storage units, loads, and monitoring and protection devices. It has flexible operating modes and schedule ability. There are two typical steady-state

operation states and two transitional states, parallel operation with the main network and islanding (autonomous) operation. The transition state refers to the disconnection, parallelism, and stoppage of the micro-network and the main network during normal operation. The system recovers from the black-start recovery control to the steady-state operation transfer.

The distributed power supply (DG) of the microgrid uses a decentralized, decentralized power generation method with the following characteristics:

1). Close to the end user;

2). The capacity is very small, generally tens of kilowatts to tens of megawatts;

3). In isolation or in connection with the distribution network, running at 380V or 10kV or slightly higher distribution voltage level (generally less than 66kV);

4). Use clean or renewable energy (natural gas, biogas, solar energy, biomass, wind- small wind, or hydro-small hydro).

3. SPECIAL PROBLEMS OF MICROGRID AND GRID

The distributed power supply in the microgrid has a low level of access voltage, and although the power is balanced on the ground, due to the related supporting protection and the imperfect security automation device, it will have a certain impact on the power grid. The specific performance is as follows:

1). There is a certain degree of complexity in the relay protection setting of the region connected to the distributed power supply, and it is more difficult to match the protection setting value;

2). Regional dispatching, grid-disconnecting, and power-off operations that are connected to a distributed power supply are also complex and need to be considered concurrently for the same period;

3). After the regional power grid connected to the distributed power source has changed load, the small power grid will send power back and forth over the grid. In the case of minor power supply overhaul and power supply on the underside of the grid, the grid economy is poor;

4). Because of the uncertainties in the power output of distributed power sources (such as the time of sunshine, the size of wind energy, etc.) and the uncertainty of the load, it is difficult to set the low-frequency and low-voltage load shedding devices. Seriously affect the safe and stable operation of the power grid.

4. MICRO-GRID CONNECTION METHOD

It is due to the special problem of microgrid and the existence of microgrids. The microgrid is connected to the network in a single-network, dual-network and dual-network mode.

4.1 Single Network and On-grid

Single-grid connection is the connection between the microgrid and the grid which is powered by a large generator, there is no electrical connection to the normal distribution network on the main loop. The microgrid can transport excess power to the large grid through the load.

4.2 Dual Network Connection

The microgrid runs in parallel with the large power grid, that is, there is an electrical connection with the normal distribution network on the main loop, and the microgrid can directly deliver excess power to the grid.

4.3 Impact of Two Grid Connection Modes on the Power Grid

1). cause harmonic and voltage flicker. Compared with single-network and grid-connected networks, the dual-network and microgrid relies on the main network. Through a reasonable control strategy, it can better focus on harmonics and improve power quality more effectively. The harmonics generated by the single-grid networked microgrid need to be improved by itself, increasing investment, and increasing the difficulty.

2). Impact on the network loss. The loss of the power grid mainly depends on the trend of the system. The access of the microgrid makes the current in each branch of the distribution network no longer a one-way flow, so it will bring about the loss of the power grid, making it not only related to the load and other factors. It is also related to the location, capacity and load of the microgrid access point and the topology of the network. Single-grid power supply directly to the user, short circuit, low voltage level, while the dual-network and network-connected mode requires first access to the main network, and then to the load, the long line, but the voltage level is high, so the size of the network loss can't be directly The comparison needs to be based on the actual grid.

5. SIMULATION ANALYSIS OF EXAMPLES

5.1 Example System

The distributed power supply of the microgrid in the example system used in this paper is 8 1.5 MW direct-drive asynchronous wind turbines with a total system load of 50.37 MV·A. The power system parameters are as follows:

Large power grid: Rated capacity 150MV·A, average voltage 10.5 kV; Transformer T1 (single-grid): Rated capacity 20 MV·A, Rated voltage 37 kV/0.4 kV, Connection mode Y/YN; Transformer T2: rated capacity 200 MV·A, rated voltage 0.4 kV/10.5 kV, Connection mode YN/Y; Transformer T3 (dual-grid connection): Rated capacity 20 MV·A, Rated voltage 37 kV/0.4 kV, Connection mode Y/YN; Line 4-3: Length L=1 km, Resistance R=0.263 Ω /km, reactance X=0.348 Ω/km, electrical B=2.088 μS/km; line 3-5: Length L=1 km, R=0.263 Ω/km, X=0.348 Ω/km, B=2.088 μS/km; load 2: 9.95+j1.6 MV·A; load 4: 20+j3 MV·A; load 5: 20+j2 MV·A.

The schematic diagram of the single-network-connected system is shown in Figure 1, and the schematic diagram of the dual-network-connected system is shown in Figure 2.

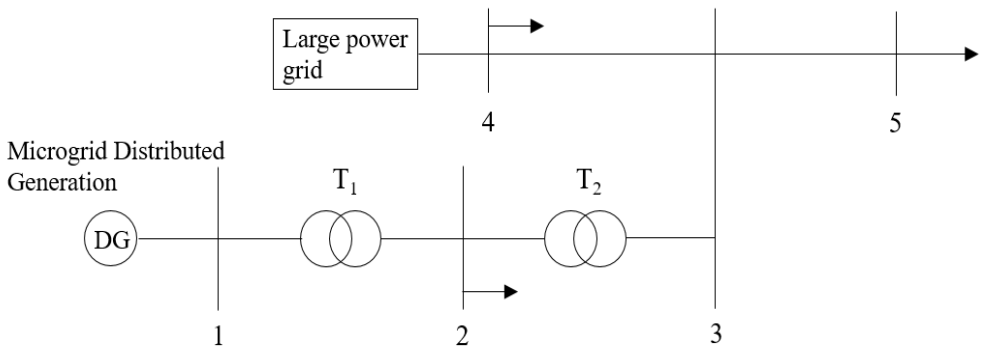

Fig. 1 Single Network and On-grid

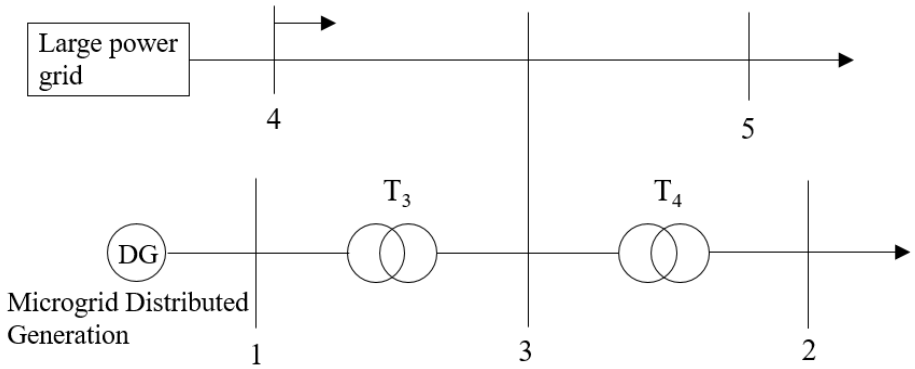

Fig. 2 Dual Network Connection

Micro-grid load power randomly fluctuates

Assume that the No.2 bus suddenly increases the load of 10 MV·A between 10 and 15s, and then removes the load of 5 MV·A. In this case, the bus voltage and the whole network frequency of the single-grid and microgrid networks are shown in Figure 3 and Figure 4.

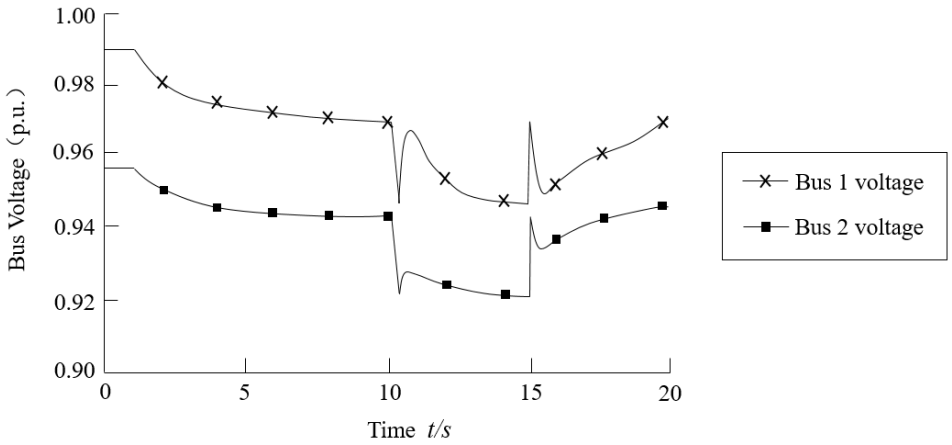

Fig. 3 Micro network single-network bus voltage

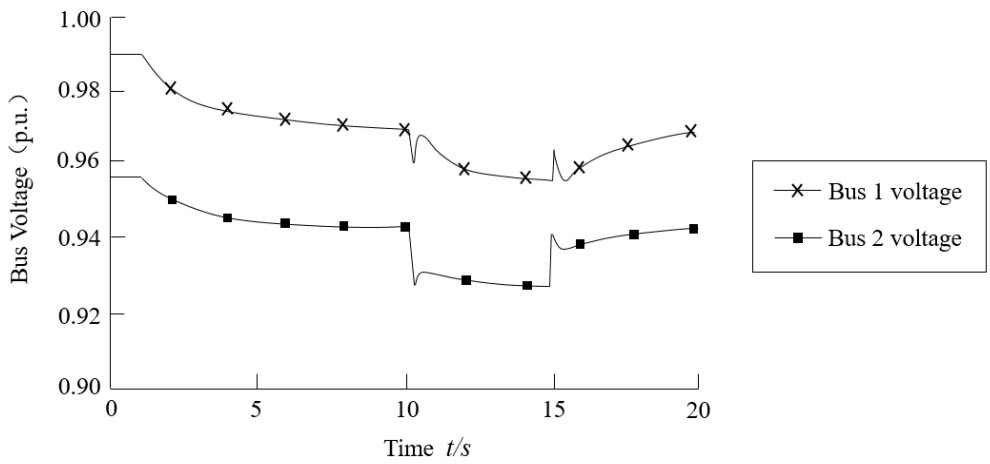

Fig. 4 Micro-grid dual-network grid-connected bus voltage

It can be seen from Figure 3 and Figure 4 that under the condition that the load power fluctuates randomly, the bus voltage fluctuations of the single-grid and microgrid networks are larger than that of the dual-network grid-connected networks. This is due to the need for the load of the microgrid to be connected to the grid. Connected to a large grid, and the electrical distance between the distributed power source and the PCC point is greater.

REFERENCES

[1] Belwin J. Brearley, R. Raja Prabu. A review on issues and approaches for microgrid protection [J]. Renewable and Sustainable Energy Reviews, 2017, 67.

[2] Ammu Susanna Jacob, Jani Das, Ajit Paul Abraham, Rangan Banerjee, Prakash C Ghosh. Cost and Energy Analysis of PV Battery Grid Backup System for a Residential Load in Urban India [J]. Energy Procedia, 2017,118.

[3] Mohammad Amin Jangjoo, Ali Reza Seifi. Real time voltage stabilization in microgrid [J]. Archives of Electrical Engineering, 2014, 63(2).

[4] S. G. Malla, C. N. Bhende. Study of Stand-Alone Microgrid under Condition of Faults on Distribution Line [J]. International Journal of Emerging Electric Power Systems, 2014, 15(5).

[5] Zhikang Shuai, Yingyun Sun,Z. John Shen, Wei Tian, Chunming Tu, Yan Li, Xin Yin. Microgrid stability: Classification and a review [J]. Renewable and Sustainable Energy Reviews, 2016, 58.

[6] Ritwik Majumder, Arindam Ghosh, Gerard Ledwich, Firuz Zare. Enhancing the Stability of an Autonomous Microgrid Using DSTATCOM [J]. International Journal of Emerging Electric Power Systems, 2011, 10(5).