World Scientific Research Journal (WSRJ) ISSN: 2472-3703
www.wsr-j.org

Numerical simulation of flow field characteristics of new hydraulic classifier

Jingzhen Cao [a], Xuefei Zheng [b], Xiaohui Zheng [c]

College of Mechanical and Electronic Engineering, Shandong University of Science and Technology, Qingdao, Shandong, 266590, China

[a]118865735489@163.com, [b]22363567141@qq.com, [c]32369626692@qq.com

---

Abstract: for the inside of a clear understanding of new type hydraulic classifier, the distribution of flow field using computational fluid dynamics software ANSYS FLUENT14.5 the different roof water speed and filling speed and the relationship between the internal flow field is simulated. Through simulation available: top water excessive speed and filling speed caused by the uneven distribution of flow field, increase the internal flow field of the disorder, the adverse effects on the separation, but there are a range of roof water speed and filling speed can stable grading the airflow field, thus to improve the classification efficiency of classifier by, in the end, through material experiments show that the simulation result is consistent with the experimental results.
Keywords: classifier; Internal flow field; Flow field distribution; Classification efficiency.

---

1. INTRODUCTION

With the rapid development of science and technology, the high accuracy of powder in all walks of life is more and more important, in the mining, building materials, food, chemical, energy and pharmaceutical industries play an important role.[1-2] classifier as a kind of separation separation equipment, its separation performance directly affect the separation accuracy of powder, fine powder separator is the key of the precision of separation of structure parameter and operating parameter setting, therefore, internal flow field of new type hydraulic separator is especially important for analysis. ANSYS FLUENT14.5 software was used to explore the flow field characteristics of the new hydraulic classifier, which provided theoretical basis for experiment and actual production.[3].

2. CLASSIFICATION PRINCIPLE OF NEW HYDRAULIC CLASSIFIER

New hydraulic classifier according to different particle settling velocity in a medium, the level of the wide particle swarm particle swarm is divided into two or more narrow level, classification, close to the level of the medium available vertical used or rotary movement. In vertical motion, the upward flow of water carries the particles with low settlement speed to the

top for discharging. Particles with high sedimentation rate are discharged from the bottom, and the coarse grain products are called sediment precipitation. The separation process is determined by the following equation $V = V_0 - U_{UP}$, according to the direction of the particle's absolute motion velocity v in the upward media flow. The absolute motion speed and direction of particles depend on the size. When $U_{UP} > V_0$, V is negative, and particles are driven up by the medium. When $U_{UP} < V_0$, V is positive and particles can still move downward. And when theta $U_{UP} = V_0$, the particles are suspended in space, with an absolute velocity of zero. A schematic diagram of the structure of the new hydraulic classifier and the grain settlement in the grading area is shown in Fig 1.If more than one grain size product is to be obtained, the overflow (or sediment precipitation) can be further graded in the ascending stream which decreases (or increases) in turn.

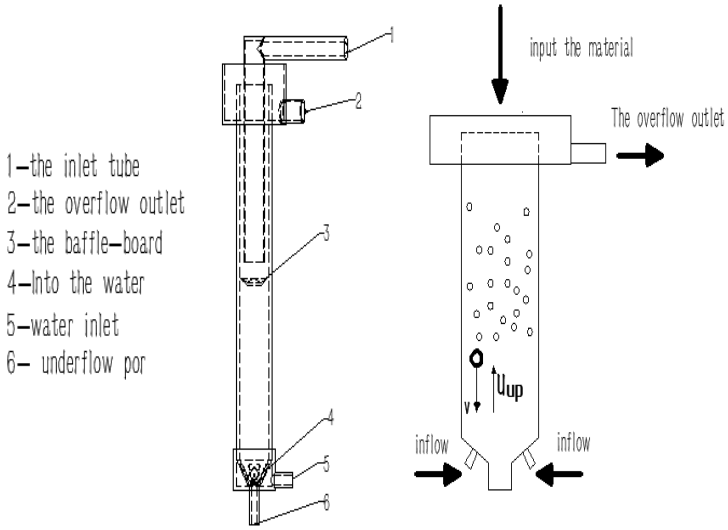

(a)Schematic diagram of classifier mechanism

(b)schematic diagram of grain settlement in a graded area

Fig. 1 schematic diagram of the structure of the new hydraulic classifier and grain settlement in the classifying zone

3. CALCULATION MODEL AND SOLUTION METHOD

The classifier is modeled according to the actual structure of the new hydraulic classifier and the main components required for simulation.[4] The main component parameters of the classifier are shown in table 1.The new hydraulic classifier mainly includes feeding tube, overflow tank and overflow port, classifying chamber, reflector plate, feed water network and bottom flow port. Traditional hydraulic classifier mainly by vertical feed, this paper improved the new hydraulic classifier by spiral feeding, so that the materials into the sizing chamber in a spiral Angle spread out, so as to avoid the traditional hydraulic classifier by vertical feeding on the disorder phenomenon caused by classifying chamber, and a new type of hydraulic classifier

in the feed tube bottom reflection board was designed, so that the screw into the slurry has the effect of an upward turn back.The corresponding model is established in Solid Works according to the size of table 1, as shown in Fig 2 and Fig 3.

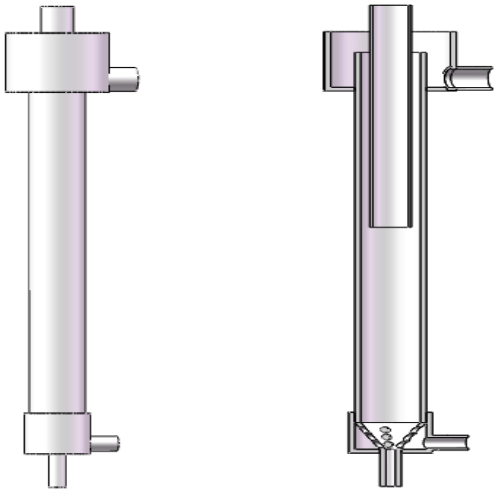

Fig. 2 Structure diagram of traditional hydraulc classifier and section diagram of middle section

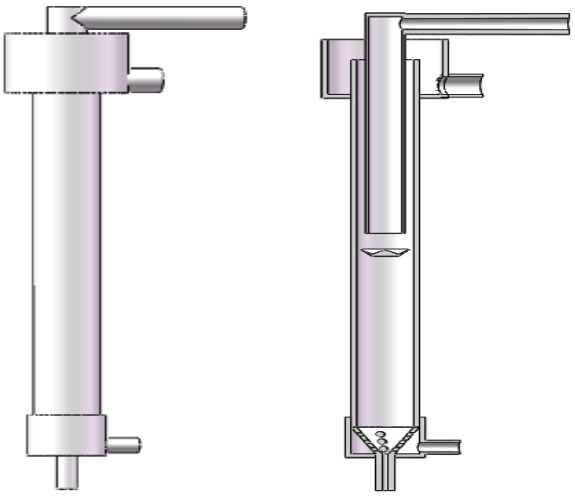

Fig. 3 structure diagram of the new hydraulic classifier and middle section profile

Table 1 model parameter Settings

Structural parameters/mm		structural parameters/mm	
Inlet pipe diameter	30	cylinder body diameter	50
Feeding tube insertion depth	185	base flow cone height	36
Diameter of overflow cylinder	100	bottom flow cone	R1=50,R2=8
Overflow cylinder height	75	bottom outlet diameter	8
Overflow outlet diameter	25	feed water net diameter	4

4. CALCULATION RESULTS AND ANALYSIS

The grading particle size of iron powder by new hydraulic classifier is determined according to the final settlement speed of iron powder in water and the velocity of rising water.[5]The classifier has many influence factors on the grading of particles, among which the inlet velocity and the feeding speed are the main factors. they affect the internal flow field of the turbulent intensity, stability and turbulence intensity and effect on the particle separation, so in order to get the ideal separation size range, you first need to clear the water velocity and filling rate on the influence of the internal flow field. This paper mainly studies the influence of the above two factors on the internal flow field, and studies the advantages and disadvantages of the traditional hydraulic classifier and the new hydraulic classifier under the same variable.

4.1 Simulation results of inlet velocity

The influence of inlet velocity on flow field in classifier is simulated. Under the condition of a certain inlet velocity, the inlet velocity is respectively set as: The flow field distribution under different inlet velocity analyzed by the simulation results is shown in Fig 4.

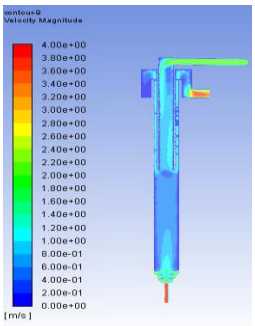

Inlet volicity v=1.5m/s

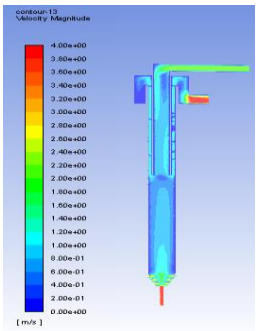

Inlet volicity v=1.9m/s

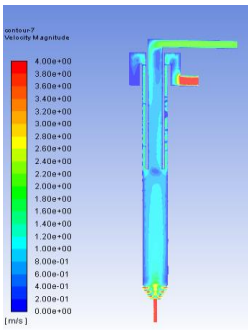

Inlet volicity v=2.5m/s

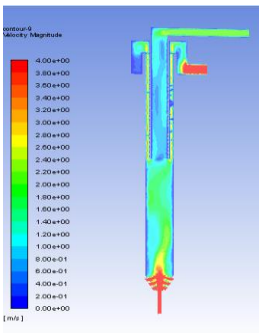

Inlet volicity v=4.5m/s

Fig. 4 flow velocity cloud diagram of x-z plane

Can be seen from figure 4, the speed of flow in the intake velocity, velocity of flow in the process of upward, when the feeding speed is constant, with the increase of feed speed, more and more into the overflow of the particles. Particles of different particle sizes can be obtained by adjusting the inlet velocity. However, when the inlet velocity of 4.5 m/s, found that the speed of the rising water has equal or more than at the end of the feeding tube feeding speed, this leads to feed has not been rising water separation was rising hose to the overflow of outflow, cannot reach the separation effect.

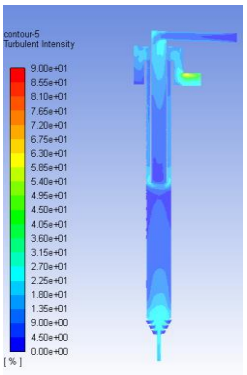

Strengh of inlet turbulence

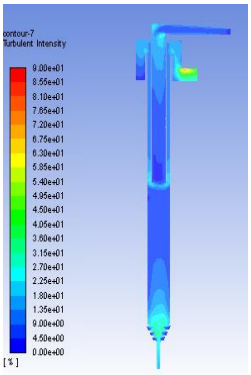

Strengh of inlet turbulence v=1.9m/s

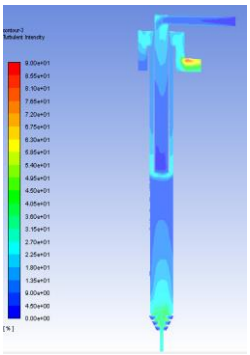

Strengh of inlet turbulence

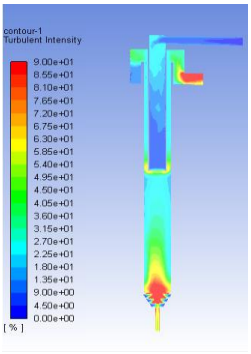

Strengh of inlet turbulence v=4.5m/s

Fig.5 cloud diagram of turbulence intensity in the x-z plane

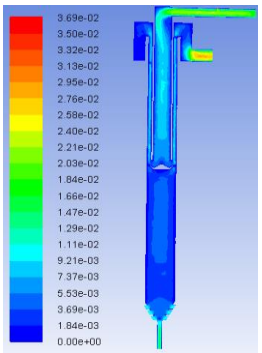

Inlet volicity v=1.58m/s

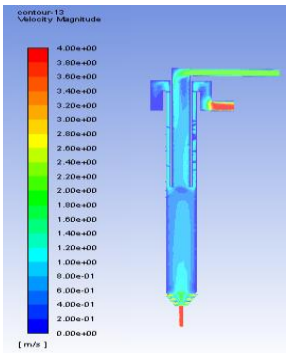

Inlet volicity v=1.9m/s

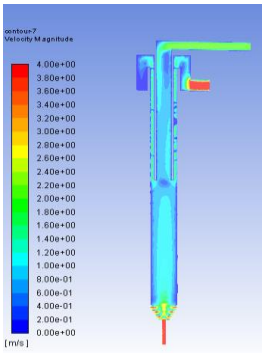

Inlet volicity v=2.5m/s

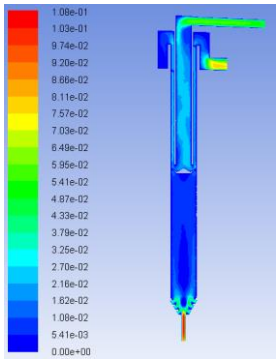

Inlet volicity v=4.5m/s

Fig6 flow velicity clouds in the x-z plane

Water velocity is small, the vessel lumen the style of the basic flow field distribution of symmetry, only when inlet velocity is large enough container cavity flow field is obvious happens disorder, so big water inflow is not suitable for separating grading. The turbulence intensity under different inlet velocity is simulated and analyzed as shown in Fig. 5.

4.2 Feed speed simulation results

The influence of feed speed on flow field in classifier is simulated. Under the condition of a certain inlet water velocity, the inlet velocity is respectively set as: V_1=1.58m/s, V_2=1.9m/s, V_3=2.5m/s, V_4=4.5m/s.The flow field distribution under different inlet velocity analyzed by simulation results is shown in Fig. 6.

5. CONCLUSION

In this chapter, the numerical simulation of the flow field of the internal flow of the slime separator is carried out, and the top water and the feed amount of the separator are investigated The influence of flow field inside the body can be concluded as follows:

(1) A water jump reflector is set at the inlet of the feed, so that the feed has a certain speed of upward reflux.After the top water is added, the small top water has great influence on the bottom cone flow field and weak influence on the flow field in the overflow cylinder. As a result, the flow field in the body is unevenly distributed and increased in disorder, which is not conducive to the separation of particles. And the amount of water with coal roof test.The results show that it is necessary to set up the roof water, and it is feasible to choose the proper roof water.

(2) The feeding speed has a great influence on the internal flow field of the body, and a small feeding speed should be selected for the limited separation chamber Degrees. If the material is too large, the discharging speed of the material will be increased, and the residence time of the material in the separator will be reduced.The upper laminar flow will become disordered, increasing the possibility of coal particle mismatches and reducing the separation performance. The results of the experiment are consistent, and the effect of the separation is seriously affected by the excessive amount of feed.

In order to avoid the influence of turbulence on the overflow product, the inclined baffle can be set at 1/3 of the upper end of the overflow cylinder to reduce the disturbance degree of the flow field. The discharge mode of the overflow port influences the distribution of the flow field to a certain extent.The overflow port of one will cause the unevenness of the flow field.

REFERENCES

[1]Shapiro M, alperin V. Air classification of solid particle[J]. Chemical Engineering and Processing, 2005, 4: 279-285.

[2]Johansson R,vertsson M.An empirical study of a gravitational air classifier[J]. Minerals Engineering, 2012, 1(5): 10-16.

[3]Galvin K P, Pratten S J, Nicol S K. Dense medium separationusing a Teetered Bed Separator[J]. Minerals Engineering, 1999: 1059- 1081.

[4]Walton D, Laskovski P. Enhanced separation of mineral sands using the Reflux Classifier[J]. Minerals Engineering, 2006, 19: 1573-1579.
[5]Kohmuench J N, Mankosa M J. Process engineering evaluation of the Cross Flow separator[J]. Minerals & Metallurgical Processing, 2002, 19(2): 43-49.