World Scientific Research Journal (WSRJ) ISSN: 2472-3703
www.wsr-j.org

Simulation and Analysis of Hydraulic System for the Manual Pilot Operated Valve of Hydraulic Support

Xiao Wang [a], Yanqiang Zhang [b], Guanghao Zhang [c]

Shandong University of Science and Technology, Qingdao, 266590, China.

[a]wx_peanuts@163.com, [b]960626479@qq.com, [c]1151722318@qq.com

---

Abstract: In the fully mechanized mining equipment, the pilot valve in manual pilot control valve was studied for fluid flow characteristics. The three-dimensional geometric model of the internal flow passage of the pilot valve was established. The pressure, velocity and turbulent kinetic cloud images of the three-dimensional flow field in the pilot valve were obtained by numerical simulation which using single-phase turbulence model. According to the calculation of the trend and change of speed, fluid pressure and turbulent kinetic energy distribution which was found that there is no air pocket in the pilot valve, but the vortex region caused a certain loss of energy, and the experiment proves that the results are the same as the CFD simulation results.
Keywords: Pilot valve; AME sim; numerical simulation; text bench experiments.

---

1. INTRODUCTION

In the process of coal mining, in order to keep a certain safety operation space, ensure the safety of the workers in the underground and the normal operation of various operations, it is necessary to support the rock of the roof and the roof falling on the top of the working face [2]. The pilot control valve plays a decisive role in completing the expected action requirements of the hydraulic support.

Manual pilot valve has simple structure, good technological performance, high pressure bearing capacity at the same time, lower control torque, down hole maintenance, and can save space. But at present, the domestic hydraulic support valve in the sealing of the problems, so a new manual pilot valve is designed, simple operation, labor saving, improve the sealing performance, and enhance the anti-pollution ability.

2. THE THEORY OF THE COMPUTATIONAL FLUID DYNAMICS THEORY

Computational fluid dynamics (CFD), by combining numerical calculation with data visualization, simulates the flow characteristics and heat transfer problems of the fluid, is another technical means to solve the above problems, in addition to the two methods of

theoretical analysis and experimental measurement. Computational fluid dynamics (CFD) has been widely used in scientific research and engineering.

The basic idea of CFD can be summed up as follows: discrete the continuous computing domain, and then set up the algebraic equations that reflect the relation between the discrete points, and obtain the approximate solution for solving the equations. CFD can be regarded as a numerical simulation of the flow process of the fluid. By simulation, the distribution of the physical quantities in the flow field and the variation of these quantities can be obtained.

3. THREE-DIMENSIONAL DESIGN OF MANUAL PILOT CONTROL VALVE

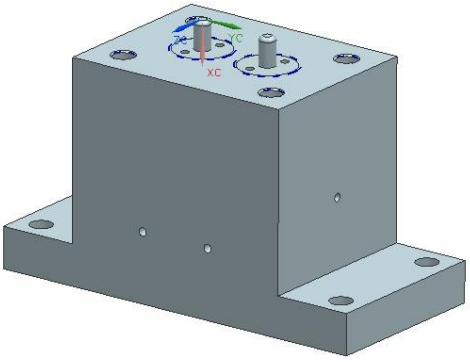

Fig. 1 The assembly drawing of the pilot valve

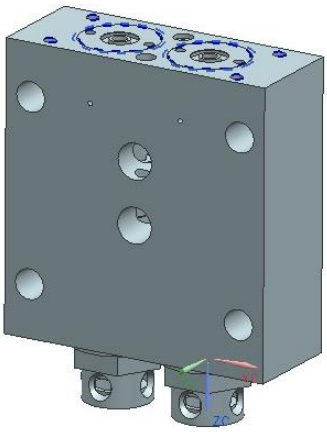

Fig. 2 The assembly drawing of the main valve

4. SIMULATION AND COMPARISON OF FLOW FIELD IN DIFFERENT BOUNDARY CONDITIONS

4.1 Grid partition

The geometric model of the internal flow channel of the pilot valve is introduced into GAMBIT2.3.16 by UG, and the grid is divided, and the grid model generated by GAMBIT is used as shown in Figure 3. In order to improve the accuracy of simulation calculation and increase the density of model grid division, the Interval Size is set to 0.2. The grid unit type adopts the Tet/Hybrid grid type, and 594495 grid units and 126027 nodes are generated.

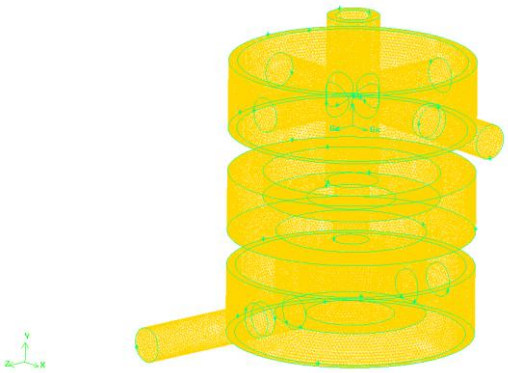

Fig. 3 Three-dimensional flow field mesh model of the pilot valve

4.2 Boundary condition

The interior of the pilot valve is only a simple flow problem, without the existence of other phases, and does not consider the problem of heat conduction and exchange. Therefore, a single-phase turbulence model is used in the simulation, and the standard two equation model is selected. The solver is based on the solver based on pressure and implicit solution. The working medium of this study is emulsion, so the liquid water is used in the simulation fluid, and it is assumed that water is an incompressible viscous Newton fluid, without considering the effect of water gravity. The physical properties of liquid water, as shown in Table 1, are set to pressure-inlet and pressure-outlet, and the inlet pressure is set to 35 MPa. The pressure is set to 34.5 MPa, and the wall boundary condition WALL is set by default. The SIMPLE algorithm is used in the pressure velocity coupling method, and the first-order upwind scheme is adopted in the discrete scheme.

Table 1. The physical properties of liquid water

Simulated fluid	Density ρ (kg/m^3)	heat capacity C_p (J/kg·K)	Heat conduction Coefficient h (W/m·K)	Dynamic viscosity μ (N·s/m^2)
Liquid water	998.2	4182	0.6	0.001003

After setting the parameters, the solution of the flow field is initialized, and all-zones is selected to calculate the initial value. The initial pressure is set to 2000 Pa, the residual monitoring diagram is opened, the iterative calculation is monitored dynamically and the iteration step is set to 1000 steps to start the solution. When the iteration goes to the 590 steps, the calculation is automatically stopped, the result converges, and iterative residuals are iterated. The line is shown in Figure 4.

One of the boundary conditions is changed to simulate the fluid flow field in the pilot valve, and the flow field changes under different boundary conditions are compared. The outlet pressure is set to 34 MPa, the inlet pressure is still 35 MPa, and the other parameters remain unchanged. The iterative solution is based on the original mesh model. When the solution is carried out to the 581 steps, the calculation is automatically stopped and the iterative residual curve converges. The simulation results are compared with the results of the exit pressure of

34.5 MPa. As shown in the following figure, the simulation results of part of the section are selected for analysis due to the limitation of the length.

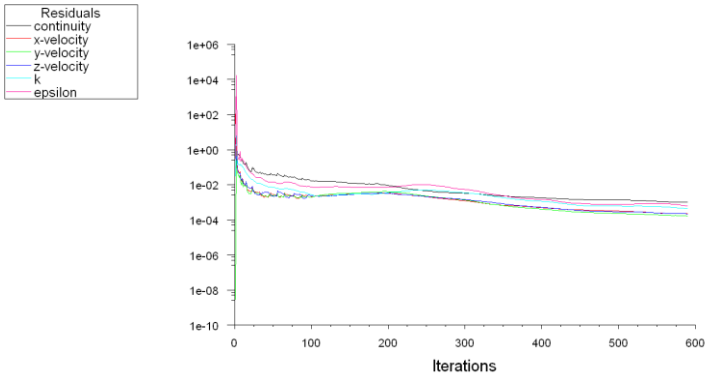

Fig. 4 Iterative residual plot

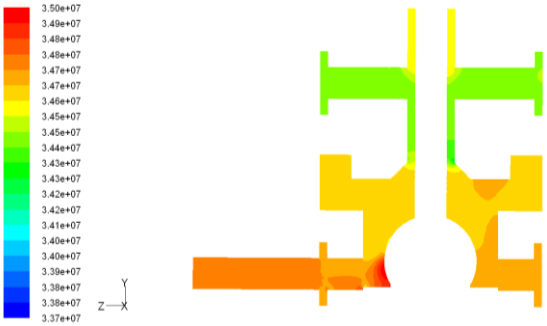

(a) Longitudinal section of the inlet

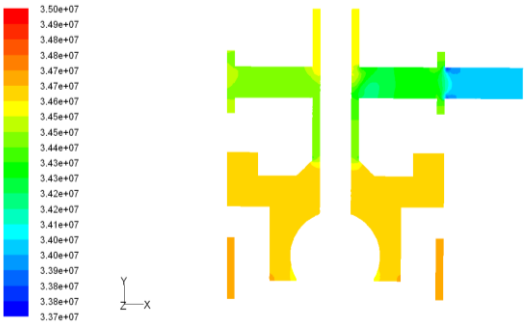

(b) Vertical section of outlet

Fig. 5 The static pressure distribution contours at different sections

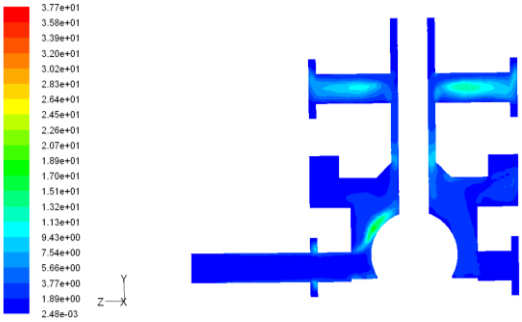

(a) Longitudinal section of the inlet

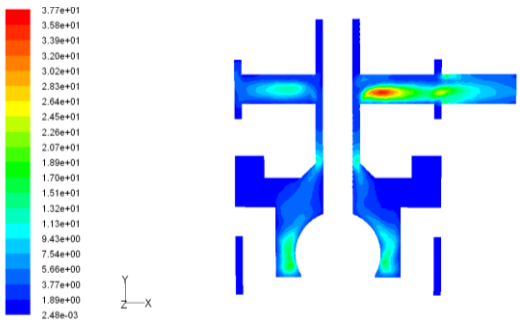

(b) Vertical section of outlet

Fig. 6 The turbulent kinetic energy contours at different sections

5. CONCLUSION

1. the general distribution trend of the static pressure distribution cloud map with the outlet pressure of 34.5 MPa and 34 MPa is not very different, the total pressure drop is 0.6 MPa and 1.3 MPa respectively, indicating that the total pressure drop of the outlet pressure is slightly smaller when the other boundary conditions are constant, that is, the energy loss is small. The greater the pressure difference between the inlet and outlet, the smaller the minimum pressure, the greater the possibility of cavitation. [48-50]. Appropriate pressure difference in import and export can avoid cavitation and cavitation, and there is no cavitation and cavitation, which plays a great role in the stability of the pilot valve and the service life of the components.

2. when the outlet pressure is 34.5 MPa, the average velocity at the inlet is 13.3 m/s, and the maximum velocity is 21.3 m/s. When the outlet pressure is 34 MPa, the average velocity at the inlet is 18.9 m/s and the maximum speed is 30.2 m/s. The area at the maximum velocity is roughly the same in two cases, which all appear in the place where the emulsion has just entered the outlet channel. The difference is only the difference in numerical values. The greater the pressure difference, the greater the speed of flow through the throttle orifice, the greater the whirlwind and the more serious loss of energy.

REFERENCES

[1] Chen Q, Stoffel B. CFD simulation of a hydraulic servo valve with turbulent flow and cavitation[C]. ASME/JSME 2004 Pressure Vessels and Piping Conference. American Society of Mechanical Engineers, 2004, 197-203.

[2] Hailing An, Jungsoo Suh, Michael W Plesniak. Flow in a Co-Axial Control Valve[C]. ASME 2003 International Mechanical Engineering Congress and Exposition. American Society of Mechanical Engineers, 2003, 457-465.

[3] Okungbowa, Norense Stanley. CFD analysis of steady state flow reaction forces in a rim-spool valve[J]. University of Saskatchewan, Saskatoon, 2006, 6-7.

[4] E Lisowski, J Rajda. CFD analysis of pressure loss during flow by hydraulic directional control valve constructed from logic valves[J]. Energy Conversion and Management, 2013, 65: 285-291.

[5] Gee Soo Lee, Hyun Chul Kim, Hyun Woo Lee. Flow force analysis of a variable force

solenoid valve for automatic transmissions[J]. Journal of Fluids Engineering, 2010, 132(3): 100-103.

[6] Zhifeng Liu, Kun Yang, Wentong Yang. The Numerical Simulation and Experimental Analysis of the Flow Field in the High Pressure Unloading Valve[C]. Computer Modeling and Simulation, 2010. ICCMS'10. Second International Conference on. IEEE, 2010, 1: 65-68.