World Scientific Research Journal (WSRJ) ISSN: 2472-3703
www.wsr-j.org

Numerical Simulation and Application of Dense Medium Hydrocyclone

Huilin Xu [a], He Wang [b], Congcong Xu [c]

College of Mechanical and Electronic Engineering, Shandong University of Science and Technology, Qingdao 266590, China

[a]Xu.Huilin@foxmail.com,[b]719275981@qq.com,[c]1004592548@qq.com

---

Abstract: Coal, as an important basic energy source and raw material, has an extremely important strategic position in the national economy. Coal preparation is an extremely important step in the coal industry production. Compared with other coal preparation equipment, the heavy medium cyclone has the advantages of simple structure, convenient operation, large amount of processing, high separation efficiency, etc. It is widely used in coal grading and concentration. Desilting and other operations, especially for some difficult-to-choose raw coal, high-sulfur coal, oxide coal, etc. have a good classification effect. This paper will establish a mathematical model and a geometric model based on the 850 medium-dense cyclone, and use Fluent software to develop numerical simulation. The liquid-solid two-phase flow field is calculated using RSM model and Mixture model, and the velocity field and pressure in the cyclone are analyzed. Field characteristics.
Keywords: coal preparation machine, heavy medium hydrocyclone, numerical simulation.

---

1. INTRODUCTION

Hydrocyclone is a device that uses centrifugal sedimentation principle to separate and classify particles. Its structure is mainly composed of feed inlet, column segment, cone segment, overflow pipe and underflow port. Although its structure is relatively simple, the internal flow field is complex and the structural form has a significant influence on the separation performance. In order to improve the separation performance of cyclones and improve their applicability, a number of new cyclones have been developed for various applications. The role of the feed port is to convert the linearly moving fluid into a high-speed swirling flow to form a centrifugal force field. The structural form and the way of penetrating with the column segment have a great influence on the energy consumption and separation performance, and there are feed forms such as involute, spiral, concentric, and arc. The involute feed port is helpful for the smooth transition of the fluid flow and is beneficial to reduce the impact of the fluid on the cyclone body. In this study, an involute feed body structure was designed. The column section is the pre-separation zone of the cyclone, the length of the column section is increased, the

cyclone treatment capacity is increased, and the separation efficiency is improved. Cone section is the main area of cyclone separation, the main size is the cone angle, the cone angle is small, the cone is long, the particle movement time is long; when the cone angle is large, the cone is short, the particle separation movement time is short, and the separation movement time is The length affects the separation performance of the cyclone. According to its main use and structure, it is generally divided into two categories: sorting and classifying cyclones. Sorting cyclones are mostly short cones, cone angles are usually 60°~180°; classifying cyclones are usually small cone angles The flower, cone angle changes according to its material properties. In order to meet the requirements of different working conditions, a spiral cone type cyclone was proposed to increase the throughput. A multi-angle cone swirler was used to increase the underflow yield. The annular stepped cone swirler was used to reduce the underflow and the hyperbolic cone. To increase the split ratio. The increase of cone angle is favorable for sorting, but too large cone angle can cause the separation granularity to increase, useful components enter the overflow and cause the loss of useful components, but too small cone angle results in inclusion of fine-grade low-grade components in the underflow. The reason for high fluid concentration, coarse particle size, and high density near the underflow port is that it not only wears quickly but also easily clogs. In order to solve this problem, a lined wear-resistant material was proposed to allow replacement after wear. Therefore, a bottom gusset opening, a rubber adjustable underflow opening, and a needle valve-type underflow opening were used.

2. MATHEMATICAL MODEL ESTABLISHMENT

The use of computational fluid dynamics for cyclone simulation and numerical analysis must be based on several basic mathematical physical equations, including mass conservation, conservation of momentum, and energy conservation equations, so that the internal flow field and particle motion trajectory of the cyclone can be obtained.

(1) Mass conservation equation

In the heavy medium cyclone, the quality of the inlet and outlet is equal, and the mass conservation equation is derived from the law of conservation of mass:

$$\frac{\partial \rho}{\partial t}+\frac{\partial \rho u}{\partial x}+\frac{\partial \rho v}{\partial y}+\frac{\partial \rho w}{\partial z}=0$$

The fluid in a typical heavy-medium cyclone is an incompressible fluid whose density is constant. The above formula can be converted to:

$$\frac{\partial u}{\partial x}+\frac{\partial v}{\partial y}+\frac{\partial w}{\partial z}=0$$

(2) Conservation of momentum equation

According to the law of conservation of energy, the momentum conservation equations in the three-dimensional coordinate system are derived:

$$\frac{\partial \rho u}{\partial t}+div(\rho u\vec{u})=-\frac{\partial p}{\partial x}+\frac{\partial \tau_{xx}}{\partial x}+\frac{\partial \tau_{yx}}{\partial y}+\frac{\partial \tau_{zx}}{\partial z}+F_x$$

$$\frac{\partial \rho v}{\partial t}+div(\rho v\vec{u})=-\frac{\partial p}{\partial y}+\frac{\partial \tau_{xy}}{\partial x}+\frac{\partial \tau_{yy}}{\partial y}+\frac{\partial \tau_{zy}}{\partial z}+F_y$$

$$\frac{\partial \rho w}{\partial t}+div(\rho w\vec{u})=-\frac{\partial p}{\partial z}+\frac{\partial \tau_{xz}}{\partial x}+\frac{\partial \tau_{yz}}{\partial y}+\frac{\partial \tau_{zz}}{\partial z}+F_z$$

For a heavy medium cyclone, the fluid viscosity is generally constant and incompressible, so the above formula can be converted into the following form, also known as the Navier-Stokes equation.

$$\rho\frac{du}{dt}=\rho F_x-\frac{\partial p}{\partial x}+\mu\left(\frac{\partial^2 u}{\partial x^2}+\frac{\partial^2 u}{\partial y^2}+\frac{\partial^2 u}{\partial z^2}\right)$$

$$\rho\frac{dv}{dt}=\rho F_y-\frac{\partial p}{\partial y}+\mu\left(\frac{\partial^2 v}{\partial x^2}+\frac{\partial^2 v}{\partial y^2}+\frac{\partial^2 v}{\partial z^2}\right)$$

$$\rho\frac{dw}{dt}=\rho F_z-\frac{\partial p}{\partial z}+\mu\left(\frac{\partial^2 w}{\partial x^2}+\frac{\partial^2 w}{\partial y^2}+\frac{\partial^2 w}{\partial z^2}\right)$$

(3) Energy conservation equation

Following the law of conservation of energy in the cyclone, the energy conservation equation is derived:

$$\frac{\partial(\rho T)}{\partial t}+div(\rho\vec{u}T)=div[\frac{k}{c_p}\cdot gradT]+S_T$$

The direct numerical simulation based on the above three equations requires huge computing resources, and it is difficult to be widely used in industry. Therefore, the method of Reynolds averaging is used to average the turbulent pulsation term, but nonlinearity is additionally introduced. For the heavy-medium cyclone, there exists a strong swirling situation in the interior. Therefore, the Reynolds stress model is adopted, and there is no isotropic assumption of other RANS models, which is more suitable for the internal flow field of the cyclone.

3. GEOMETRIC MODELING AND SIMULATION CALCULATION

According to the design method and practical application conditions of the heavy-medium cyclone, the main structural parameters of the 850-medium cyclone were calculated, and the model was established by the three-dimensional modeling software Soliworks as shown in Fig. 1.

Then import ICEM for hexahedral meshing, the mesh quality is more than 0.4, meet the Fluent software calculation requirements, and then import Fluent for simulation calculation. Numerical simulations of two cyclone models were performed using Fluent. Single-phase simulation was performed using Reynolds stress model (RSM). The inlet was set as the velocity inlet and the velocity was 10.0m/s. The boundary conditions of the overflow and underflow ports were all pressure outlets, and the outlet pressure was equal to atmospheric pressure. The nature of the flow field solution is to solve the discrete equations. Currently, the solution methods of the discrete equations are mainly coupled and separated solution methods.

The characteristics of the coupled solution method are the simultaneous solution of discrete equations to obtain The value of the variable; and the decomposition of the solution method is not directly seeking the simultaneous equations, but in order to solve each variable discrete equations.

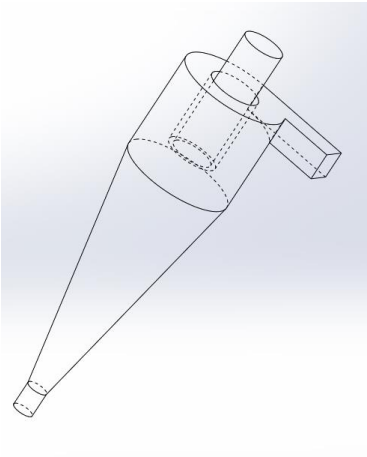

Figure 1 Cyclone structure parameters

For the method of solving the flow field, the pressure correction method in the decomposition method is widely used in engineering. The essence of the method is the iterative method. In each operation, the initial value of the pressure field is given first, and then the speed is calculated accordingly. field. The commonly used pressure correction methods are SIMPLE algorithm, SIMPLER algorithm, SIMPLEC algorithm and PISO algorithm. The SIMPLE algorithm obtains the pressure correction by solving the pressure correction equation; SIMPLER uses a more effective pressure equation to solve, due to taking into account the various influence items in the equation. Therefore, it has better convergence accuracy, but at the same time the workload is 30%~50% larger than the SIMPLE algorithm. The SIMPLEC algorithm takes into account the speed effect of the peripheral nodes ignored in the SIMPLE algorithm and has better convergence; the PISO algorithm corrects the pressure The quantity has been corrected and has the characteristics of high efficiency convergence, but at the same time, the amount of calculation is much larger than that of SIMPLE, and the required computer memory is also greatly increased. For different fluid problems, the actual results of different algorithms are different. At the same time, meshing, selection of relaxation factors, coupling degree of equations, flow conditions, etc. all have an influence on the calculation. Comprehensive consideration should be given to the numerical value of the cyclone with the SIMPLE algorithm. simulation.

4. ANALYSIS OF SIMULATION RESULTS

4.1 Static Pressure Analysis

Taking the standard atmospheric pressure as the reference pressure, the pressure cloud diagram of three cross-sections and one vertical section is taken as shown in FIG. 2 . It can be seen from the figure that the pressure on the outer wall side of the cyclone is higher, which is in line with the characteristics of semi-freedom vortex and forced vortex pressure distribution. The inner

hydrostatic pressure of the cyclone is axially symmetrical and the pressure at the wall surface is highest, and the maximum gauge pressure is 6.46×. 105Pa, greater than the external atmospheric pressure is positive, the pressure from the wall facing the axis gradually decreases with decreasing radius. When passing a certain point, the pressure becomes negative, the static pressure in the axial center is the lowest, and the external cyclone pressure absolute value is greater than Internal swirl. From the Bernoulli equation, it can be known that due to the high-speed rotation of the external swirl, a negative pressure appears in the center of the heavy medium cyclone, and the maximum vacuum degree is 9.20×10 4 Pa. Since the outlet is the same as the outside, this also results in the formation of air at the center position. The main reason for the column.

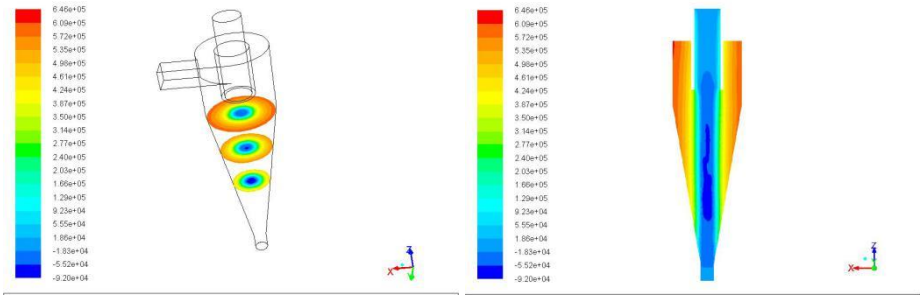

Figure 2 Pressure cloud

4.2 Tangential speed

The tangential velocity is the most important source of centrifugal separation, and the tangential velocity determines the separation effect of the heavy medium cyclone. In the fluid movement in the cyclone, the tangential velocity directly determines the strength of the centrifugal force field, which is the main driving force for the separation of the two phases and is an important factor to measure the separation performance of the cyclone. It can be seen from Fig. 3 that the tangential velocity distributions of the two are the same and the symmetry is good. They are all Rankine vortex distributions centered on the radius. From the axial center to the radial wall, the tangential velocity first increases sharply, which is in line with the tangential velocity distribution in the forced vortex, and the velocity gradient is large; when the maximum tangential velocity point is reached, the tangential velocity decreases with increasing radius. It is in line with the tangential velocity distribution in the free vortex range; the tangential velocity near the wall rapidly decreases to zero. From Figure 3, it can be seen that the tangential velocity exhibits a double peak shape, the center position is the internal swirl flow, the flow direction and the external The cyclone was negative, and the speed outside the inner swirl reached a maximum of 26.6 m/s, which was greatly improved compared to the feed rate of 10 m/s. It is also the use of high-speed rotation inside and outside the swirl, cyclone separation separation effect.

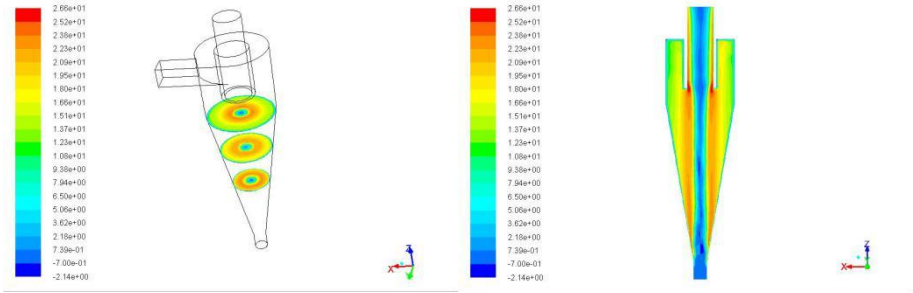

Figure 3 Speed cloud

4.3 Zero Speed Envelope

Connecting the points where the axial velocity of each section of the cyclone is zero can form a zero-velocity envelope surface. As shown in Fig. 4, the zero-velocity envelope surface is used as the interface, and the fluid within the interface rotates upward to form an internal rotation. The flow, while the fluid outside the interface rotates downwards to form an outer swirling flow.

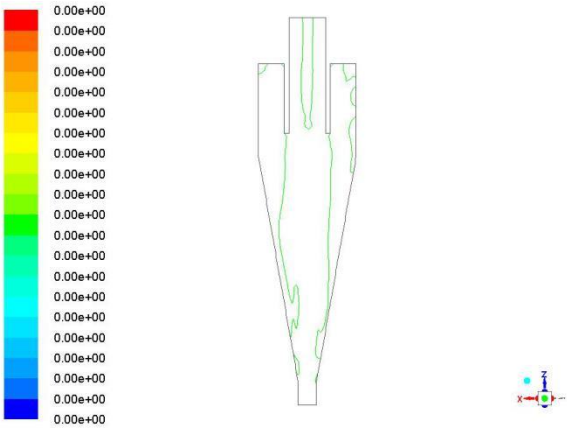

Figure 4 Zero Speed Envelope

5. SUMMARY

The use of heavy medium cyclone separation has good economic efficiency and work efficiency in the coal preparation industry. In this paper, numerical simulation method is used to mathematically model and geometrically model the 850 cyclone, based on mass conservation equations and energy conservation equations. And momentum conservation equations, based on the balance of components, the use of computational fluid dynamics software Fluent launched a theoretical study, analysis of its pressure field and tangential velocity field, can more intuitive to see the characteristics of the internal flow field. When the inlet velocity is 10m/s, the liquid-solid two-phase flow field is calculated using RSM model and Mixture model. The maximum tangential velocity of the velocity field and pressure field inside the cyclone is 26.6m/s. 6.46×105Pa, the maximum vacuum degree is 9.20×104Pa. It has certain guiding significance to the production practice through the theoretical method.

REFERENCES

[1]Liu W C, Yang J K, Xiao B. Application of bayer red mud for iron recovery and building material production from alumosilicate residues [J]. Journal of Hazardous Materials, 2009(2): 474-478.

[2]Yong Guang-fang, Qi peng. Study on red mud as secondary resource for iron concentration [C]. Advanced materials research. 2010, 114(07): 2271-2277.

[3]M. S. Rukhlyadeva, M. V. Belousov, E. A. Nikonenko, et al. Production of black iron oxide from red mud [J]. Russian Journal of Applied Chemistry, 2015, 88(3): 377-381.

[4]V. A. Dikov, D. E. Sukhanov. Feasibility of hydrocyclones for combined cleaning of circulation and waste water [J]. Chemical and Petroleum Engineering, 2014, 49(9-10): 619-623.

[5]Jong-Oh Kima, Jeongyun Choib, Seongeon Leec, et al. Evaluation of hydrocyclone and post-treatment technologies for remediation of contaminated dredged sediments [J]. Journal of Environmental Management, 2016, 166: 94-102.