World Scientific Research Journal (WSRJ) ISSN: 2472-3703
www.wsr-j.org

# Analysis of flexion bearing capacity of different section steel types

Bo Li *

School of Architecture Engineering, Binzhou University, Binzhou 256600, China

1454242394@qq.com

---

*Abstract: Steel structure is widely used in the field of Civil Engineering. The form of section steel is varied. The bearing capacity of the components of different section forms is also different. In this paper, the bearing capacity of the following three forms of cross section is compared and analyzed. The common H -, Z - and T - shaped cross sections are studied. Using the finite element software ABAQUS to establish the numerical analysis model. The rod is simulated by beam element. The bottom of the rod is the fixed end and the top is free. Besides, a vertical load is applied on the top. Through the unanimous defect mode method, the initial defect is considered in the analysis of buckling capacity. The results show that: the plastic strain of the three different sections of the cross section steel all occurs at the bottom. For the three cross sections, the Z - shaped section has the worst flexion bearing capacity, which should be avoided in the design.at the same time, the H shaped section is the most reasonable and the bearing capacity is the strongest.*
*Keywords: goldmine, Flexion bearing capacity; Steel section; ABAQUS; Buckling mode.*

---

## 1. INTRODUCTION

T Cold-formed steel section molding is extremely flexible. Besides, the utilization ratio of material and section structure is closely related. In order to achieve a more full use of materials, through the reasonable design of cross section, the components with more excellent mechanical properties is one of the targets of scholars. The cross section of cold-formed thin-walled steel is varied. The overall buckling performance, local buckling performance and initial defect size of different sections are different. In this study, the common H -, Z - and T - shaped cross sections are studied. The initial defect 1/1000 is introduced into the three types of cross section according to the design specification for steel structure.

## 2. MODEL OVERVIEW

The steel strength used in this paper is Q235 and the length of the three steel columns all are 2m. The yield strength of steel Q235 is eaqul to 235MPa and the limit strength of the steel is equal to 420MPa. The size of the section is shown in Figure 1. The dimensions not shown in Figure 1 are in millimeters. The finite element software ABAQUS is used to set up the analysis model

for numerical simulation. The rod parts are Beam element, and the steel constitutive model adopts the double fold line strengthening model. The bottom of the rod is considered at the fixed end, the top is free and the vertical load is borne. Standard analysis method is used.The finite element model is set up as shown in Figure 2.

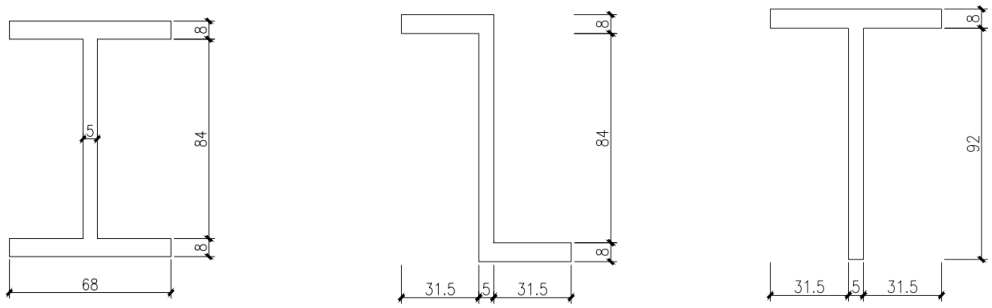


(a) H shaped section (b) Z shaped section (c) T shaped section

Fig.1 Section steel

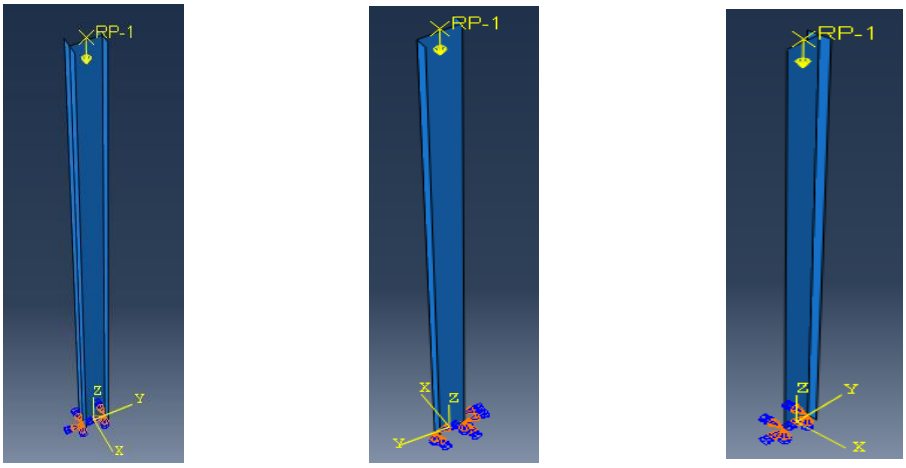


(a) H shaped section (b) Z shaped section (c) T shaped section

Fig.2 Finite element models of steel column

## 3. ANALYSIS OF BUCKLING MODE

When the initial defect is introduced according to the uniform modal defect method, firstly the buckling mode analysis of the rod is required. According to the characteristics of the critical state, the instability form can be divided into instability of branch point and instability of extreme point. The first type of instability is idealized structure, that is, the structure reaches a certain load, in addition to the original balance exists, there may be a second equilibrium. It is also known as the branch point instability or equilibrium bifurcation instability. It is also known as eigenvalue buckling. The corresponding load with structural instability can be referred to as the buckling load or the critical load. For example, the instability of the imperfect center compression column, the plate under pressure in the middle surface and the pressed cylindrical shell all belong to the first kind of instability. The second kind of instability is that when the structure is unstable, the deformation develops very large, and there is no new form of

deformation. That is, the equilibrium state does not undergo qualitative change. This instability is also called the extreme point instability.The corresponding load of the destabilization is called the crushing load or the limit load The first-order buckling mode of three cross section forms is shown in Figure 3. From Figure 3, it is known that the first buckling modes of three kinds of cross section are dominated by lateral bending deformation. The eigenvalues of the first - order buckling mode of three sections are shown as shown in Table 1.

Table 1. First order eigenvalue of buckling mode

| condition type | H shaped section | Z shaped section | T shaped section |
|---|---|---|---|
| eigenvalue | 2.0658 | 1.9508 | 0.9906 |

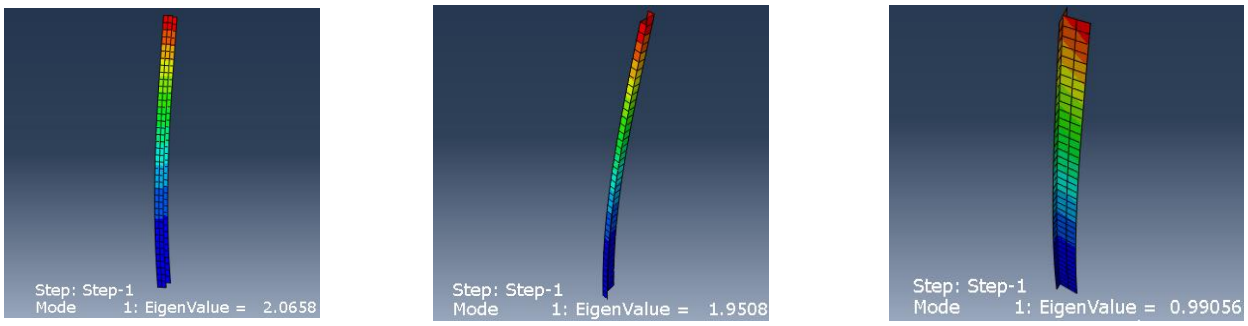


(a) H shaped section (b) Z shaped section (c) T shaped section

Fig.3 Finite element models of steel column

## 4. ANALYSIS OF BEARING CAPACITY

The initial defects introduced in this paper only consider the first order buckling mode shown in Figure 3. The initial defect factor is 1/1000. A vertical load is applied on the top of the member bar. The condition of plastic strain under the action of load is shown in Figure 4. The relationship between the vertical axis force and the vertex horizontal displacement at the bottom of the rod is shown in Figure 5.

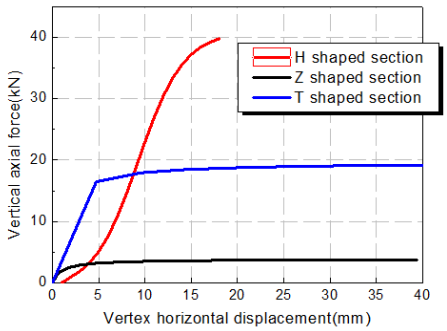


Fig.5 Vertical axial force - vertex horizontal displacement

## 5. CONCLUSION

The results which are shown in Figure 4 and figure 5 exhibit some conclusions as follow:

The plastic strain of the three different sections of the cross section steel all occurs at the bottom. Therefore, the bottom strength should be properly strengthened during the design process.

For the three cross sections, the Z - shaped section has the worst flexion bearing capacity, which should be avoided in the design.at the same time, the H shaped section is the most reasonable and the bearing capacity is the strongest.

## ACKNOWLEDGEMENTS

This research is supported by the Dual service project of Binzhou University (BZXYSFW201704), Youth talent innovation project of Binzhou University (BZXYQNLG201701).

## REFERENCES

[1] Si han.Experimental research and finite element analysis on steel braced frame structures with random imperfections[D].Shenyang： Shenyang Jianzhu University,2014. (in Chinese)

[2] Li Yang. Buckling analysis and optimization design of thin-walled stiffened structures[D]. Beijing: Beijing University of Technology,2013.(in Chinese)

[3] Matthews, F. L.,Zhang, Y. Postbuckling behavior of anisotropic laminated plates under pure shear and shear combined with compressive loading[J].AIAA Journal, 1984, 22(2):281-286.

[4] Xie Qiang. State of the art of buckling-restrained braces in Asia [J]. Journal of Constructional Steel Research, 2005, 61(6):727-748.

[5] Eyassu Wodesenbet, Samuel Kidane, S. S. Pang. Optimization for buckling loads of grid stiffened composite panels [J]. Composite Structures, 60(2003):159-169.

[6] Zhao Junxian, Wu Bin, Ou Jinping. A novel type of angle steel buckling-restrained brace: cyclic behavior and failure mechanism[J]. Earthquake Engineering & Structural Dynamics, 2011, 40(10):1083-1102.

[7] Wang Haiming, Zhang Yaochun. DIRECT CALCULATION METHOD OF OVERALL BENDING DEFLECTION FOR COLD-FORMED STEEL FLEXURAL MEMBERS[J]. Industrial Construction,2011,41(1):130-135. (in Chinese).

[8] Wang Haiming. STUDY ON THE STABILITY BEHAVIOR OF COLD-FORMED STEEL FLEXURAL MEMBERS[D]. Harbin: Harbin Institute of Technology,2009.(in Chinese).