World Scientific Research Journal (WSRJ) ISSN: 2472-3703
www.wsr-j.org

Trapezoidal Pepper Dryer Design

Yue Guo [a], Hui Kang [b] and Yan Zhao [c]

College of Electrical and Mechanical, Shandong University of Science and Technology,

Qingdao Shandong 266590, China

[a]1006754714@qq.com, [b]814918574@qq.com, [c]364636770@qq.com

---

Abstract: From the point of view of drying technology and economy, large-scale equipment has the characteristics of low consumption of raw materials, low energy consumption, high level of automation and low production cost. Complete sets of equipment and components can be provided to factories of different production scale in time, with the characteristics of fast production and easy maintenance [1].Through understanding and analyzing the characteristics of pepper drying and the present situation of drying process at home and abroad, this paper provides the design basis for this design. The drying principle of this trapezoidal band pepper dryer: hot air passes over the pepper, heat is transferred to the pepper, the hot air is cooled by the pepper, and the wet fraction is passed into the air from the pepper and taken away. Drying characteristics: drying rate is constant in constant drying stage, free moisture is found on the surface of pepper, and the drying process is vaporization. When fully vaporized, the wet surface retreats from the pepper surface, and some shrinkage may occur. At the end of this stage, the wet fractionation interface may move inward, and the wet fraction will migrate from the inside of the pepper to the surface by capillary force. The cutting and drying rate may still be constant [2]. When the average moisture content reaches the critical moisture content, further drying will lead to dry points on the surface. Due to the internal and surface humidity gradient, the wet fraction diffuses to the surface through the pepper and then the drying rate is limited. The heat was transferred to the surface at first and then transferred to the inside of the pepper. Because the depth of the wet interface gradually increased and the thermal conductivity of the outer dry area was very small, the drying rate would decrease, which was called the stage of decreasing drying rate [3]. The mild stage is when the chili temperature drops to the ambient temperature, stays in the ambient temperature for a while, and then heats and dries. The drying efficiency can be greatly improved by gentle Su [4].
Keywords: Ladder type, belt type, chili dryer.

---

1. INTRODUCTION

The significance of this study is: through the hot air drying experiment, study the drying and dehydration characteristics of pepper, determine the best drying process conditions, and design

a ladder-type pepper drying machine, which can guarantee the quality of dried pepper [5]. Modern pepper drying technology has solar drying, dielectric drying, heat pump drying, microwave drying, thin layer drying, far-infrared drying, vacuum drying, combined drying, etc. [6]. Improving traditional production techniques, researching and developing advanced dry-making technologies and equipment suitable for the production of peppers, and applying new-type processes to produce high-quality dried chili peppers are urgently needed for the development of the current dried pepper industry [7].

2. OVER ALL

2.1 Overall plan

The ladder-type pepper dryer consists of three drying units and a feeding device. Each drying unit consists of an air supply system, an electric heating system, a conveyor belt tensioning system, and a transmission system. The amount of drying medium, temperature, and humidity other parameters to control. Ladder-type pepper dryers combine with belt dryers to operate flexibly. The wet material drying process takes place in sealed cabinets and isolates dust from the outside. In addition, the vibration or impact of pepper on the belt dryer is slight and will not break. Ladder design allows peppers to reverse their effect on the next unit, which increases the drying efficiency. In this program, the drying section was divided into three units, namely the first drying stage, the slow-su period and the second drying stage.Drying principle: Hot air passes through the peppers, transfers the heat to the peppers and the hot air is cooled by the peppers. The moisture is introduced into the air by the peppers and taken away. The overall device schematic is shown in figure 1.

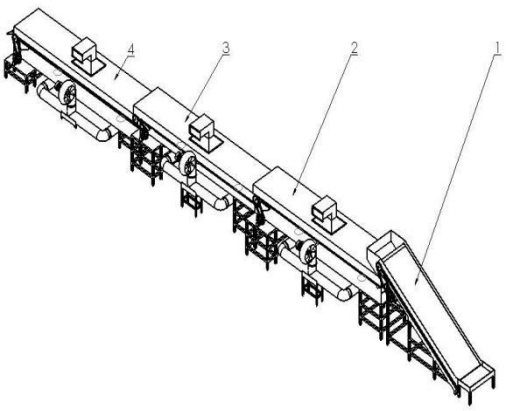

Fig. 1 Unit composition of Ladder Type Pepper Drier

The ladder-type pepper dryer consists of four stages. The speed of the conveyor belt is exactly the same. During the process of feeding peppers from the feeding section to the discharge port, the line speed of each conveyor belt must be exactly the same in order to ensure that the peppers will not be congested from the previous level to the next level. Because it is necessary to ensure the same speed of movement, the transmission form of each stage is exactly the same.

The structures of the first drying stage, the slow suing stage and the second drying stage are basically similar.

3. THE MAIN PART OF THE TRANSMISSION AND WORKING PRINCIPLE

The selected type of motor is decelerated by a speed reducer to achieve the linear speed of the conveyor belt movement of the ladder belt type pepper dryer. The output speed of the conveyor shaft is output by the output shaft of the speed reducer. A driving sprocket is mounted on the output shaft, and the driving sprocket transmits power to the chain through the chain. Driven sprocket, driven sprocket mounted on the drive roller, so that the transmission of power to the drive roller, the drive roller and conveyor belt friction between the conveyor belt movements. Conveyor devices as shown in figure 2.

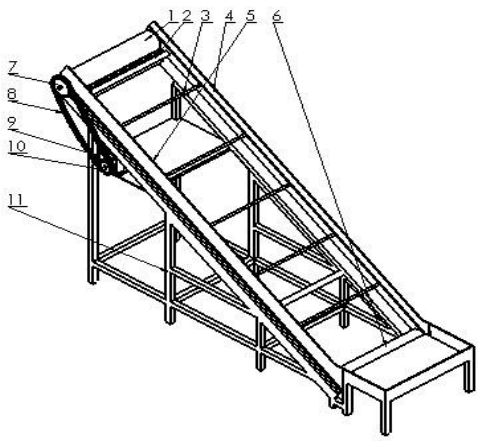

Fig. 2 Conveyor composition (conveyor belt hidden)

Because the ladder-type pepper dryer in the work process, although the material on the surface of the conveyor belt is lighter, the heat provided by the electric heating device during the drying process of the pepper is relatively high, plus some other reasons, so that the conveyor belt becomes loose. Design this sheet the tight device is to prevent the conveyor belt from working properly due to slack, which effectively improves the service life of the conveyor belt.

The working principle of the tensioning device principle: With the help of the lever, a pinch wheel is pressed on the conveyor belt. Because the pinch wheel receives gravity, it will continue to give a force to the conveyor belt, so that the conveyor belt is in tension at all times. This tensioning device allows the conveyor belt to be permanently stretched under the condition that the conveyor belt is stretched by the load.

Transmission part: The transmission part is mainly driven by the motor through the reducer and chain drive to move the conveyor belt.Figure 3 shows the tensioning device.

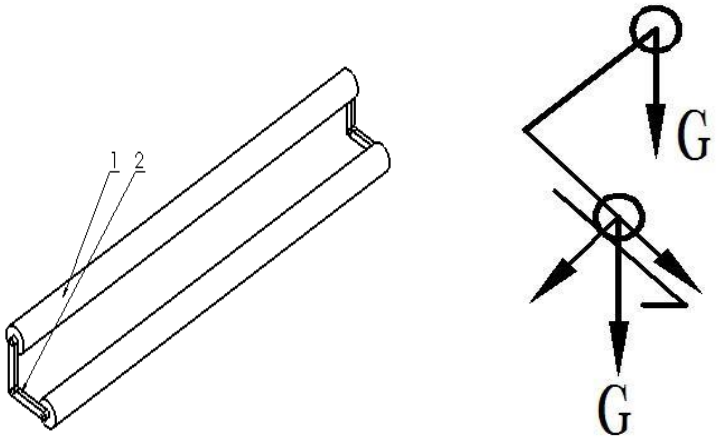

Fig 3 tensioning device

The drying section consists of conveyor belts, drive rollers, set rollers, tensioners, electrothermal dryers, fans, air ducts, air outlets, feed inlets, and transmissions. After the peppers enter the constant-rate drying stage from the conveying section, the peppers are guided on the conveyor belt by the inner guide plate, and the motor gives them power. The speed reducer gives the ideal rotation speed and the pepper on the conveyor belt slowly advances through the chain drive in the box.The electric heating device heats the dry air at the bottom of the box, and the fan outside the box presses the air into the bottom of the box according to the ideal air volume to make the hot air flow upward, so as to realize the continuous upward flow of hot air on the conveyor belt. The continued heating of the peppers achieves the effect of removing moisture quickly and dryly.

In this design, the electrothermal heating device is directly placed inside the drying box, below the conveyor belt, so that it is relatively close to the drying material. This design can not only heat the ambient air blown in by the fan, but also can indirectly convey the belt and dry it. Material baking, effectively improve the thermal efficiency, reduce the loss of heat caused by other links, not only improve the thermal efficiency, but also reduce the drying cost. This design requires that the temperature of the electric heating device be adjustable and the range is 50-100°C.

Gentle stage: The slow stage is designed according to the drying characteristics of pepper. The slow stage is to reduce the temperature of pepper to reach the environmental temperature, to reduce the gradient of temperature difference of pepper, and to improve the evaporation efficiency of the water in the inner combination of capsicum.

Second drying stage: the second drying stage is to reheat and dry the chili which is transported in the gentle stage, and finally to make the pepper reach the required drying level.

The slow recovery stage is the same as that of the second drying stage, the movement form and the first drying stage.

4. CONCLUSION

The design summary has the following features.The whole is divided into four parts: the first drying stage, the slow drying stage and the second drying stage. The drying efficiency is improved effectively and the drying cost is saved.Pepper is transported by conveyor belt inside the machine, material movement is stable and impact is small. Conveyor belt is trapezoidal distribution, achieve the effect of reverse material, can improve the drying efficiency. Each part is equipped with a separate motor, reducer and chain drive, through the same configuration to achieve the same speed to the line, to avoid material congestion phenomenon.

REFERENCES

[1] Pan Yongkang, Wang Xizhong, et al. Modern drying technology [M] Beijing: Chemical Industry Press, 1998.2.

[2] Jin Guosen, et al. Drying equipment [M]. Beijing: Chemical Industry Press, 2002.7.

[3] Pan Pyongyang. Development of modern drying technology in China [J]. Journal of drying journal, 2005, (8): 43-45.

[4] Hu Xiaoqiu. Research and development of food processing machinery and equipment contributed to the agricultural economy of our province [J]. Southern agriculture, 2000, (4): 22-23.

[5] Zhuang Chan ran. China dried chili [M]. China Agricultural Science and Technology Press, 1995, (7): 1-55.

[6] Liu Human. Chili drying technology and equipment [J]. Processing and storage, 1999, (7): 38-39.

[7] Chinese Academy of Agricultural Mechanization Sciences. Manual of agricultural machinery design [M]. Beijing: Machinery Industry Press, 1972.