World Scientific Research Journal (WSRJ) ISSN: 2472-3703
www.wsr-j.org

The Design of Medical Wheelchair for the Disabled

Jiangui Sun [1, a], Zhaoxing Cui [1, b], Dandan Zong [1, c] and Yifei Yan [2, d]

[1]College of mechanical and Electronic Engineering, Shandong University of Science and Technology, Qingdao, China

[2]Faculty of Management, Qingdao Technological University, Qingdao, China

[a]sunjiangui123@163.com, [b]1365341577@qq.com, [c]15725088785@163.com, [d]850821664@qq.com

---

Abstract: Through studying the current situation of the development of medical wheelchairs for the disabled, and analyzing the physiological and psychological characteristics of the disabled, the medical wheelchairs for the disabled is designed. On the basis of the principle of convenience, safety and affective, designing the angle and size of each part of the wheelchair. Calculating the obstacle height of the wheels, make medical wheelchairs for the disabled better accord with ergonomics's basic requirements. Medical disabled wheelchair adopts PLC to control, which the user can easily finish forth and go back movement and side-to-side movement. Even medical wheelchairs for the disabled can't instead of human body, but it accomplishes the organic combination of mechanization and automation, and has the function of the ground or surmounting obstacles, thus it can help patients to get rid of other's help to go out by themselves.

Keywords: wheelchair structure, obstacle height, PLC.

---

1. INTRODUCTION

1.1 Research background

With the continuous development of society, human science and technology are more and more developed, but the attendant industrial accidents and car accidents occur frequently, so the number of disabled people in our country is also increasing. It is very necessary to provide them with a simple and reliable device that will enable them to restore their self-care ability as much as possible and to live like a normal person, so as to reduce the burden on their families. Nowadays, with the rapid development of mechanical and electronic technology, people's requirements for quality of life are constantly increasing, and the humanization of product design is also increasingly important. Therefore, the design of wheelchairs for medically disabled persons is the most important design priority [1-2].

1.2 Research status and development trend

The structure and function of wheelchairs are constantly changing. In recent years, multifunctional wheelchairs have gradually emerged. The new wheelchairs have brought more and more conveniences to users. These new wheelchairs have functions such as obstacle avoidance and intelligent control and have been implemented manually. Push, electric three-in-one. The continuous development of these smart wheelchairs will certainly bring convenience to more and more people with disabilities, so that more and more people with disabilities will no longer have to suffer the pain of staying in bed all day, so that they can live their lives as much as possible. This article designs a wheelchair with medical protection for people with a protective shed. Medical wheelchairs for people with disabilities have a more human body-friendly design than ordinary wheelchairs, and a removable shelter and control system are designed based on ordinary wheelchairs [3-4].

1.3 Designed plan

The innovative design of the basic structure and principles of wheelchairs for medically disabled people will involve many subject knowledge and require high designers' capabilities. Therefore, to achieve this innovation, it is necessary to build on many computer-assisted research tools. For a variety of reasons, the innovative design in this area is difficult to achieve, so this paper only considers from the perspective of humanity, and optimizes the size and angle of the structure.

There are three main components for wheelchairs for medically disabled people: frame, shelter, and intelligent control device. The frame also includes front and rear wheels, seat cushions, backrests, and pedals. The names of the wheelchair structures are shown in Figure 1. The designed wheelchair has two degrees of freedom, namely, forward and backward movement and left-right steering movement.

Through reading the domestic and foreign literature, we understand the development trend and status quo of wheelchairs, and then according to ergonomics, determine the external dimensions and angle parameters of wheelchairs that meet the human comfort [5].

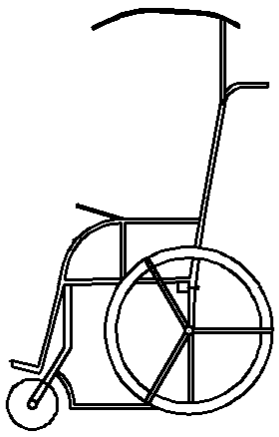

Fig. 1 Structure of a wheelchair

2. THE DESIGN OF WHEELCHAIR STRUCTURE

According to the principles of ergonomics, the parameters that determine the angles and dimensions between the various structures of the wheelchair must be based on the physiological characteristics of the human body, and to the maximum degree of comfort required by ergonomics.

2.1 Frame angle design

When a person is in a wheelchair, the impact on the comfort degree should be the angle between the backrest and the seat cushion. If the angle between the backrest and the seat cushion is less than 90°, the user's spine will lean forward and the seat will be long. If you maintain this, you will feel pain in the spine area. Therefore, the angle of the designed wheelchair should be greater than 90°, but it should not be too large to prevent the body from excessively tilting and affecting the operation of the wheelchair. According to the allowable adjustment range, the final determination is 96°. The seat cushion should be designed with a certain degree of back rake, and the body should be moved backwards by gravity. Of course, this angle should be selected moderately, and finally determined to be 5°. If the inclination angle of the lower leg plate is designed properly, it can ensure the comfort of the user's legs. Finally, the angle between the standard lower leg plate and the cushion is determined to be 100°, that is, the angle between the lower leg plate and the horizontal plane is 75°. In order to allow the user's feet to be well secured, the angle between the footboard and the calf plate was determined to be 92°. The angle of the main part of the wheelchair identified in Figure 2 is shown in Figure 2.

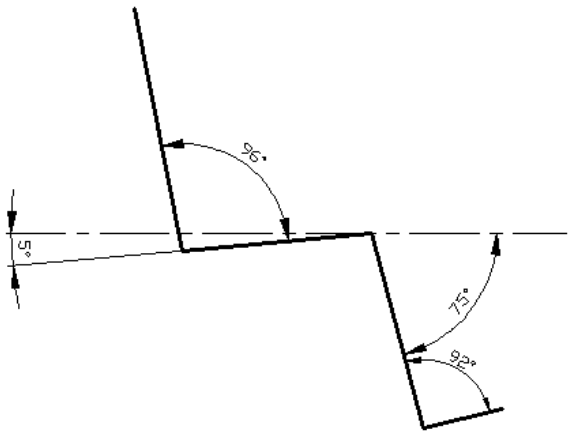

Fig. 2 Angles between major parts

2.2 The design of the size

According to ergonomic design principles, the external dimensions of the wheelchair have a great influence on the comfort of the wheelchair. In other words, to give the user a comfortable feeling, the size of the wheelchair and the basic measurement of the human body must be determined. Conduct a comparative study and then determine the basic dimensions of the designed wheelchair.

The backrest of the wheelchair can be said to be the main contact area of the user's upper body and the main support area of the human body's back. Moreover, the design of the backrest should be strictly in accordance with the size of the human body in the sitting posture, so that the designed height and width of the backrest of the wheelchair would not be inconsistent with the ergonomic design principles. The height of the human body in the seated position is about 600 mm for most people, and the shoulder width of the human body is about 460 mm for most people. This size is also unisex size, so that the design of the wheelchair is only limited because of the special crowd, so the backrest The dimensions are determined to be 600mm x 500mm [6].

2.3 The design of the wheel

The so-called minimum turning radius of a wheelchair is the minimum radius needed to make a turn during the use of a wheelchair. The smaller the radius, the better the wheelchair's flexibility, so it is smaller for some special occasions such as toilets, corridors, elevators, etc. The turning radius is very convenient. The following is a schematic diagram of the turning of a wheelchair. As shown in Figure 3, the smaller the Rmin, the better the mobility of the wheelchair, and the special medical wheelchair will have higher requirements in this respect.

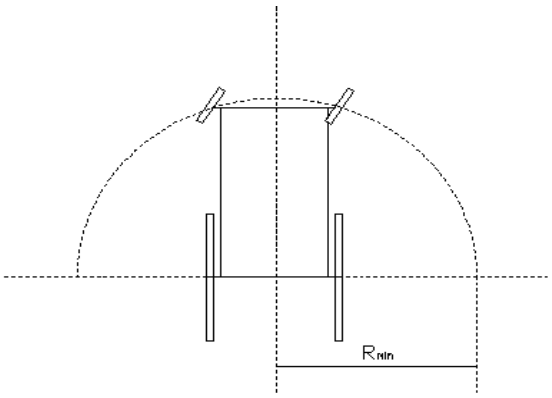

Fig. 3 Schematic diagram of wheelchairs for medically disabled persons

Therefore, the minimum turning radius of wheelchairs for medically disabled persons is determined to be 1298mm. The actual turning radius value also requires the use of production prototypes for specific measurements.

The obstacle height can be solved by the static equilibrium equation. Assume that the radius of the front wheel is R1 and the radius of the rear wheel is R2. Then R1=0.08m, R2=0.41m, a=0.15m, b=0.35m, and L=0.5m. Figure 4 shows the front wheel of the wheelchair for medical disabled persons. The maximum driving force of the largest motor is Ftmax=509.2N. The weight of the person is 80kg, and G is the total gravity of the system and the person to take 1968.8N.

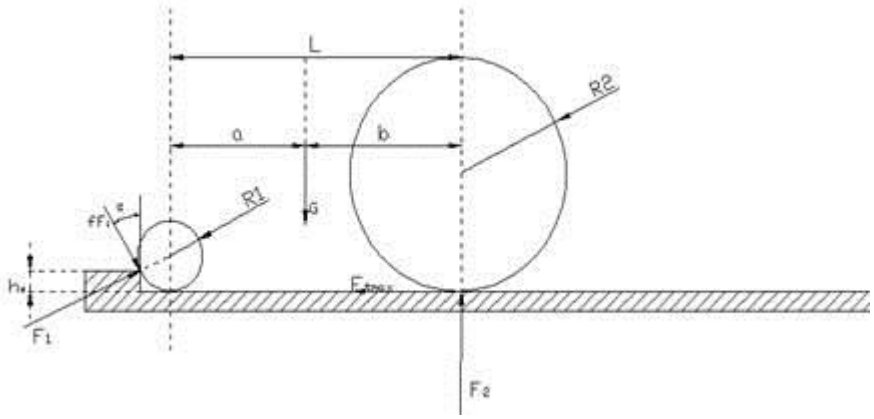

Fig. 4 Schematic diagram of wheelchair front wheel for patients with medical disability

The force diagram from the front wheel over the steps is available:

$$\sum F_x = 0 \quad F_1\cos\alpha + fF_1\sin\alpha - F_{t\max} = 0 \tag{2.1}$$

$$\sum F_y = 0 \quad F_1\sin\alpha + F_2 - fF_1\cos\alpha - G = 0 \tag{2.2}$$

$$\sum M_A = 0 \quad fF_1R_1 + F_2L - Ga - F_{t\max}R_t = 0 \tag{2.3}$$

Here assume that f = 0, after the deformation, the above equations can be deformed:

$$\begin{cases} F_1\cos\alpha = F_{t\max} \\ F_1\sin\alpha = G - F_2 \end{cases} \tag{2.4}$$

$$\therefore F_2 = \frac{Ga + F_{t\max}R_1}{L} \tag{2.5}$$

In the formula: F_2——Rear support;

G——All gravity;

a——The distance from the center of gravity to the front wheel;

$F_{t\max}$——The maximum driving force of the motor;

R_1——Front wheel radius;

L——Front-to-rear wheel distance.

Put G =1969.8N, a =0.15m, $F_{t\max}$ =509.2N, R_1 =0.08m, L =0.5m into the formula (2.5):

$$F_2 = \frac{1969.8N \times 0.15m + 509.2N \times 0.08m}{0.5m} = 672.41N$$

Put the formula (2.4) add two squares to each other:

$$F_1 = \sqrt{F_{t\max}^2 + (G - F_2)} \tag{2.6}$$

In the formula: F_1——Front wheel support;

$F_{t\max}$——The maximum driving force of the motor;

Put $F_{t\max}$ =509.2N, G =1969.8N, F_2 =672.41N into the formula (2.6):

$$F_1 = \sqrt{509.2^2 + (1969.8 - 672.41)^2}\,N = 1393.74N$$

The formula (2.4) deformatiom:

$$\sin\alpha = \frac{G - F_2}{F_1} \tag{2.7}$$

The formula $\sin\alpha$ ——The sine of the angle of friction with the vertical direction;

Put G =1969.8N, F_2 =672.41N, F_1 =1393.74N into the formula (2.7):

$$\sin\alpha = \frac{1969.8 - 672.41}{1393.74} = 0.93$$

The force diagram obtained by the front wheels crossing the steps is available:

$$\because \sin\alpha = \frac{R_1 - h_w}{R_1} = 1 - \frac{h_w}{R_1} \tag{2.8}$$

In the formula $\sin\alpha$ ——The sine of the angle of friction with the vertical direction;

h_w ——Frontal obstacle height;

Put $\sin\alpha$ =0.93, R_1 =0.08m into the formula (2.8):

$$h_w = R_1(1 - \sin\alpha) = 0.08m \times (1 - 0.93) = 0.006m$$

Combined with the actual situation, the majority of the population weight values are calculated into the calculation, and it can be determined that the obstacle height of the medical front wheel of a disabled wheelchair is 0.006 m. In the same way, it can be determined that the obstacle height of wheelchairs for medically disabled persons is 0.057m.

3. CONTROL SYSTEM

3.1 The working principle of the Wheelchairs

By reference to determine the following is a motor wiring diagram shown in Figure 5, look at the left part of the figure, when the relay KM1 energized, the motor will be energized, set at this time the motor steering is positive; then when the relay KM2 electrified After that, the motor will be energized, and the steering of the motor will be reversed. Based on this principle, the right and left steering function of the wheelchair can be realized. Looking at the right part of the figure, when the relay KM3 is energized, the motor will be energized and the direction of rotation of the motor is set to be positive; then when the relay KM4 is energized, the motor will be energized, and the motor steering will be reversed. According to this principle, the basic working function of a wheelchair can be achieved.

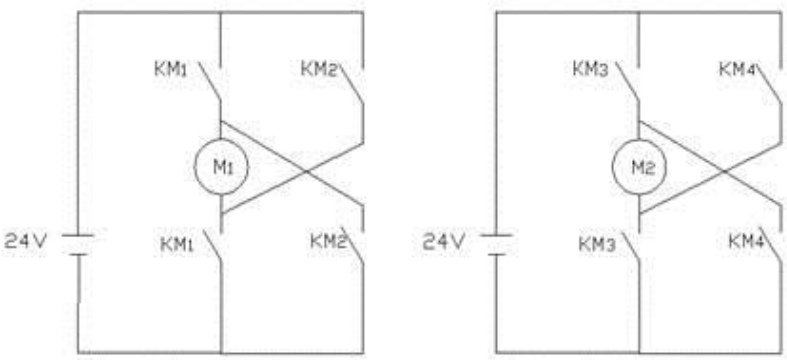

Fig. 5 Motor wiring diagram

3.2 The control principle of the PLC

PLC is a kind of programmable logic controller. The wheelchair designed in this article needs to use the PLC component if it wants to rely on the motor to perform various actions. The wheelchair control system designed in this paper refers to the principle of the PLC to control the forward and reverse rotation of the motor. By referring to the data, the PLC wiring diagram is shown in Figure 6, so that the positive and negative rotation of the two motors in the control system of the wheelchair can be realized. In order to achieve the function of steering and front and rear movement of the wheelchair.

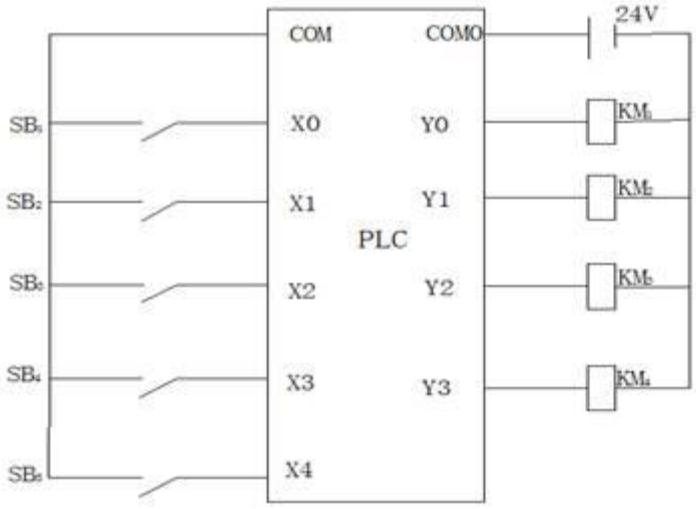

Fig. 6 PLC wiring diagram

In order to realize the positive and negative control of the PLC control motor, it is necessary to program the PLC internally and use the I/O interface technology to realize the exchange of motor and PLC internal program data so that intelligent control of the wheelchair can be realized.

4. CONCLUSION

First of all, it studies the current status and existing problems of wheelchairs for medically disabled persons. It carefully analyzes how the wheelchairs for medically disabled persons need to be improved, and refers to a large number of previous experience to determine a wheelchair structure with shelters. Design plan. Then according to the basic requirements of ergonomics, the angle and size of the important parts of the wheelchair were designed. Because some parts of the ordinary wheelchair are not designed properly, it will cause some troubles for the users, so during the design process, the important parts the optimization design was carried out and the wheel radius of rotation and obstacle height were analyzed. Secondly, the intelligent control system of the wheelchair is briefly described, and the control principle of the PLC is briefly explained. The intelligent design of the wheelchair thus achieved solves the problem that previous users need manual laboriously, and truly bid farewell to the assistance of others, and can completely allow the user controls himself and completes the manual and electric control methods. This is also the development trend of modern medical wheelchairs.

ACKNOWLEDGEMENTS

Here I am very grateful for the enthusiastic help of the tutor. When I learned the paper where I did not meet, the teacher always gave me an explanation. I also want to thank my classmates. When I encounter problems that will not occur, we will discuss together and we will tackle the challenges. Without them, I will not write this paper.

REFERENCES

[1] Orlov P. Fundamentals of Machine Design [M].Moscow: Mir PUb, 1987.

[2] Fioretti S, Leo T, Longhi S.A navigation system for increasing the autonomy and the security of powered wheelchairs [J].Rehabilitation Engineering, IEEE Transactions on, 2001, 84(2):45-48.

[3] Orlov P. Fundamentals of Machine Design [M].Moscow: Mir PUb, 1987.

[4] Francois Pasteau, Vishnu K. Narayanan, Marie Babel, Francois Chaumette. A visual servoing approach for autonomous corridor following and doorway passing in a wheelchair [J].Robotics and Autonomous Systems, 2016, 75 (3):67-68.

[5] Tan Hui. Research on Permanent Magnet Brushless DC Motor Applied to Two-wheeled Electric Vehicles [D]. Shanghai: Shanghai University, 2000.

[6] Yuan Kui. Research Status and Trends of Intelligent Wheelchairs [J].China Medical Devices Information, 2009, 15 (1):6-6.