World Scientific Research Journal (WSRJ) ISSN: 2472-3703
www.wsr-j.org

The Analysis of Disc Brake

He Wang [a], Congcong Xu [b], Huilin Xu [c]

College of Mechanical and Electronic Engineering, Shandong University of Science and Technology, Qingdao 266590, China.

[a]719275981@qq.com, [b]1004592548@qq.com, [c]Xu.Huilin@foxmail.com

---

Abstract: Brake, which is one of the most important systems in the car, is also an important part of the driver. The vehicles break can be divided into disc brake and drum brake. In this paper, through the analysis of the working principle of disc brake and on the basis of the original data, through analysis on braking force to determine the braking torque of the brake, friction disc size, pedal manipulation force and stroke control of the braking basic parameters. Through the brake on the structure analysis, the friction plate structure, plate structure and a brake spring and a control mechanism is designed. And according to the design requirements of the brake of rectangle spline, spline type of rectangular spline, and check the strength, and calculation results accord with the requirements. The design of the disc brake of the brake design requirements of the design, in order to ensure that the car in the driving of the braking and emergency braking and keep the safety on the slope. Therefore, the brake is completed to ensure the driver's driving safety requirements.
Keywords: disc brakes; car; analysis.

---

1. INTRODUCTION

The vehicle is used to allow the external force to exert a part of the force on the wheels of the vehicle, so that a series of specialized devices collectively generate forced braking devices are collectively referred to as the vehicle brake system. According to the driver's request, the running vehicle is forced to slow down so that the vehicle is stopped. This is the function of the brake. With the development of science and technology, the automotive industry is pursuing a higher standard to meet the needs of social development, as the economy, reliability and safety of today's automobile development, and can meet the requirements of environmental protection. Speed and safety are contradictory. To solve this problem, it should be considered in many aspects. One of them is that the car needs good performance braking performance.

The development of expressways shows that the socio-economic development is continuing at a rapid pace. However, with the increase in high-speed traffic and traffic density, traffic accidents are frequent. Therefore, it has become a very attractive issue to ensure safe traffic. The requirements for the construction and braking performance of automotive brake systems

have also gradually increased. When steering through different roads or crossings, the speed must be reduced, especially with obstacles and pedestrians, vehicles or other things. It needs to be reduced in speed or even zero in the shortest time. If the car does not have such performance, high speed cannot be achieved. The car is just under a long slope, because of gravity, it accelerates to a dangerous degree. At that time, speed was limited to a safe range and remained stable. In addition, parking has been suspended, especially on ramps, and it should be made to be reliably in the same place when the malfunction occurs in the common brakes, usually with a parking brake device as a braking system. Even if the death rate of millions of cars is decreasing, the death rate per 110,000 people is rising.

2. DISC BRAKE PRINCIPLE AND CHARACTERISTICS

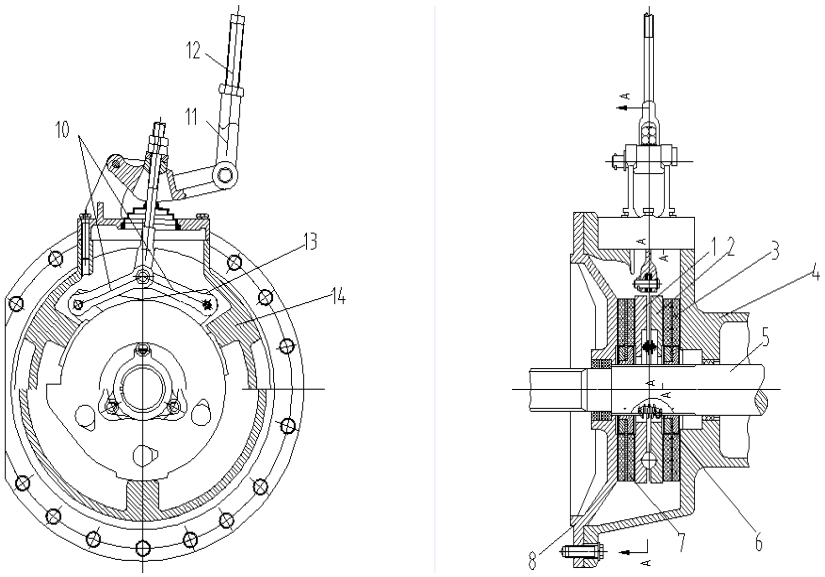

Figure 1. Part diagram of booster disc brake

1, 2 - pressure plate 3, 7 - friction disk 4 - half shell 5 - half shaft 6 - return spring 8 - middle housing 9 - adjusting bolt 10 - diagonal rod 11 - adjusting fork 12 - rod 13 - pressure plate Shoulder 14 - Housing Shoulder

The friction discs 7 and 3 are glued to each side of the differential and have a splined shaft that can slide back and forth on the splined shaft and in the rotating part of the brake. Two friction plates exist between the malleable cast iron round plates 1 and 2, and they have three shoulders on the surface of the support half shell 4, which can be rotated in a small arc. The five oval-shaped pits on the inner surface of the double platen have five balls and three springs 6 press the plate. After the central cover 8 and the friction plate 4 are treated opposite to the friction plate. Between the friction discs and the pressure discs, the friction discs, the axle sleeves, and the intermediate cover plate, there is a braking gap. When braking, the brake pedal passes through the relative rotation between the platens and pulls the rod. The five balls held in the pit are from the bottom to the side of the pit roller. The two plates of the crowd, the two plates press the two friction plates to the axle shell and the middle screw cap makes frictional moments on the friction surface of the stage, and the final axle brakes. If the tension of the

brake pedal springs 6 and 2 is released, then reset, so that the steel ball enters the bottom, and the gap on both sides of the friction disc is reset.

When the friction disc rotates clockwise, the friction torque platform will allow them to follow the rotation, but when the pressure plate is not able to rotate due to the recruitment of 13 pairs of 14 restricting the shoulder half shaft shell, the pressure plate 2 is relatively smooth by the friction torque. The hour hand rotates to assist the ball in keeping the two pressure plates squeezed open and more effort is exerted to manipulate. Disc brakes have a reinforcing effect during braking. When the friction disc rotates clockwise, the friction torque platform will allow them to follow the rotation, but when the pressure plate is not able to rotate due to the recruitment of 13 pairs of 14 restricting the shoulder half shaft shell, the pressure plate 2 is relatively smooth by the friction torque. The hour hand rotates and assists the ball in continuing the squeeze of the two pressure plates, with more effort to manipulate. The contrast between the two:

① the disc brake's braking force under the liquid (gas) pressure and its constant braking efficiency are much higher than that of the brake drum. In drum brakes, much heat is generated during braking because of poor heat dissipation. However, the structure of the disc brake will be more complex drum brakes, brake calipers, piping systems, higher requirements, the cost is higher than the drum brakes. The trend of brake drums for disc brakes in the automotive sector is gradually being replaced. Now with the development of materials science, reducing the cost of automobiles will gradually replace drum-type brakes.

②with the same volume of output braking torque, the disc brake has a smaller mass and size than a drum brake.

③the disc type drum type friction pad is easier to repair after friction lining wear, has a simpler mechanism and simpler maintenance maintenance.

④the small gap between the friction block and the brake disc reduces the operating time of the piston and allows the force transmission ratio to have an increased probability in the drive mechanism.

⑤the thermal expansion of the brake disc does not cause the loss of the brake pedal, which is caused by the expansion of the brake drum. Also, the casting of the brake disc can be enhanced to increase the strength of the brake disc and the machining capability of the casting. In addition, a certain number of holes are provided on the brake disc to accelerate ventilation and heat dissipation and enhance braking efficiency.

3. OVERVIEW OF THE MAIN COMPONENTS OF THE DISC BRAKE

(1) Brake disc

The diameter of the brake disc should be as large as possible, and the effective radius of the brake disc is also increased, which can reduce the clamping force of the brake caliper and reduce the pressure and working temperature of the unit. The diameter of the rim is limited, and

the diameter of the brake disc is generally chosen as the hub with a diameter of 71% to 78%. For vehicles with a gross mass greater than 2T, the upper limit is taken.

In order to reduce the mass, the thickness of the brake disc should not be very large. In order to let the temperature drop, the thickness of the brake disc should not be too small. Therefore, the brake disc can be made solid, or it needs cooling and ventilation, and the middle brake disc is poured with a vent pipe. Generally, a solid disk having a thickness of 0-21 mm is available, and a vented brake disk having a thickness of 21-50 mm is used, and a widely used brake disk of 21-31 mm is used. In emergency braking at higher speeds, the brake disc may be thermally deformed, causing a quiver. In order to improve the heat dissipation performance of the friction surface of the brake disc, most of the brake disc is in the middle cavity of the air brake disc, so that the temperature of the brake disc is reduced by 21% to 40%. [1]

Brake disk installation. The brake disc is a component of a rotating pattern with a slight gap between the friction pads. The useful radius of the brake disc refers to the center from which the friction pad wears in to the center of the brake disc.

(2) Braking friction pads

The friction material above the brake disc is clamped by the piston to push it into a friction pad. The friction pad is also divided into two types, a friction material and a base plate, which are connected together.

It is recommended that the radius R2 and the inner radius R1 outside the friction pad and the radius outside the friction pad should be less than or equal to 1.5 compared to the inner radius. According to the unit area of the recommended brake pad, the mass of the vehicle occupied by the disc brake pad working area A should be within the range of 1.5 to 3.6 kg/mm2.

In order to avoid damage to the brake disc, in the past, users will rely on periodic inspections to determine the remaining amount of friction pads observed; later, the above base plate installation friction pad wear indicators, when the friction liner wear reaches the remaining few, indicators and brakes Disk contact, when the driver presses on the brake pedal, appears unusual sound, and now the more accurate tip of friction lining wear is to install electronic wear indicators. When the friction pad is worn, the wear indicator line is broken and the warning light will be on. [2]

4. DETERMINATION OF BRAKING TORQUE

Braking of the vehicle while driving

The selected model is the main parameters of the Great Wall pickup：

Gross weight of car:2101 kg,

Wheelbase：1950 mm,

Centroid position:780 mm,

Centroid height：700 mm,

Synchronous adhesion coefficient： 0.7,

Driving wheel tire dynamic radius：0.626 m,

Transmission ratio of brake and brake wheel： 4.846

$$M_{r1}=\frac{\varphi m_s g r_{aq}(L-a)}{2i_m(L+\varphi h)}\ \frac{0.7\times 2100\times 10\times 0.625\times(1.95-0.78)}{2\times 4.846\times(1.95+0.7\times 0.7)}=454.5\,N\cdot m \tag{1}$$

m_s --The quality of use of the entire vehicle m_s =2101kg，

r_{aq} --Power radius of vehicle-driven tires r_{aq} =0.626m，

φ --Vehicle-driven adhesion coefficient φ =0.7

a--The ordinate of the center of mass of the vehicle a=780mm，

L--Wheelbase of the vehicle L=1950mm，

i_m --Ratio of brake to drive wheel i_m =4.846，

h--The centroid height coordinates of the vehicle h=700mm.

(2) Vehicle parking on the ramp

The car is parked downhill, the rear axle adhesion is，

F2φ = ma*g*φ* （L1/L*cosα -hg/L*sinα ）

When the car is uphill, the rear axle adhesion is,

F2φ = ma*g*φ* （L1/L*cosα +hg/L*sinα ）

$$M_{r2}=\frac{m_s g(\sin\alpha-f\cos\alpha)r_{aq}}{2i_m}=\frac{2100\times 10(\sin 20^\circ-0.02\times\cos 20^\circ)\times 0.625}{2\times 4.846}=438\,N\cdot m \tag{2}$$

f —The rolling resistance coefficient of the vehicle, f =0.02，

a—Ramping angle when ramps are parked,a= 20°

Take a large value M_r = 454.6 $N\cdot m$ Calculated torque as a brake.

5. BRAKE WEAR CHECK

By (2-4) can be drawn：

Pressing force is

$$Q=\frac{M_r}{\mu i R_P}=\frac{M_r}{0.5\mu(R_1+R_2)i}=\frac{454500}{0.5\times 0.3\times(50+90)\times 4}=5411\,N \tag{3}$$

Unit pressure is

$$q=\frac{Q}{\pi(R_2^{\ 2}-R_1^{\ 2})}=\frac{5411}{3.14\times(90^2-50^2)\times 10^{-6}}=307722\ \text{N/m2} \tag{4}$$

Unit slip function is $p=\mu q v$

V--Line speed

$$V=\frac{\pi R_2 n_{ew}}{30 i_{bv\max} i_z}=\frac{3.14\times 0.09\times 2000}{30\times\frac{29}{38}\times\frac{39}{8}}=5.06\,m/s \tag{5}$$

n_{ew}--Engine rated speed, n_{ew}=2000r/min，

i_{bvmax}--The highest gear ratio of the gearbox, $i_{bvmax}=\frac{29}{38}$,

i_z--Central transmission ratio, $i_z = \frac{39}{8}$

$p = \mu qv$ =0.3×303229×4.95= 0.5 $MPa \cdot m/s$

The important parameter of the brake operating life is the unit pressure q. If the q value is too small, the size of the brake will be increased. However, if q is too large, the brake will be easily worn. For general transportation vehicles, q is required to be less than 300,000 to 500,000 N/m2, because it is suitable by checking that q=307723 N/m2 meets the requirements.

Since the peripheral speed at this location is the highest, the unit friction coefficient should be calculated according to the outer circle of the friction plate. For a domestic domestic transport vehicle, the requirement is less than 0.5 to 0.8 Mpa/m.s. It is appropriate to meet the requirements through calculation.

6. SUMMARY

The brake designed this time is a disc type automobile brake. The indispensable part of the vehicle includes brakes. The design of the brakes has continued to develop, and its technology has become more and more mature. However, research on specific components still requires more in-depth analysis.

In this paper, the disc brake is compared with the drum brake. The structure and principle of the disc brake are analyzed, and the torque and brake wear problems of the braking force are calculated accordingly.

REFERENCES

[1] Sawczuk W, Szymański G M. Diagnostics of the railway friction disc brake based on the analysis of the vibration signals in terms of resonant frequency[J]. Archive of Applied Mechanics, 2017, 87(5):801-815.

[2] Zhang Z, Oberst S, Lai J C. Uncertainty Analysis for the Prediction of Disc Brake Squeal Propensity[C]// INTER-NOISE and NOISE-CON Congress and Conference Proceedings. 2017.

[3] T Raja, G Mathiselvan, M Sreenivasulureddy, Design and analysis of Air flow duct for improving the thermal performance of disc brake rotor[J]. Journal of Planning Education & Research, 2017, 23(3):299-311.

[4] Raja T, Mathis elvan G, Sreenivasulureddy M, et al. Design and analysis of Air flow duct for improving the thermal performance of disc brake rotor[C]// Materials Science and Engineering Conference Series. Materials Science and Engineering Conference Series, 2017.

[5] Belhocine A, Wan Z W O. CFD analysis of the brake disc and the wheel house through air flow: Predictions of Surface heat transfer coefficients (STHC) during braking operation[J]. Journal of Mechanical Science & Technology, 2018, 32(1):481-490.