World Scientific Research Journal (WSRJ) ISSN: 2472-3703
www.wsr-j.org

Strength Analysis of the Longitudinal Beam of the Carrier Platform on a Solid-Car Garage Based on Workbench

Yong Li [a], Hongxi Yang [b] and Baigong Wang [c]

College of Mechanical and Electronic Engineering, Shandong University of Science and Technology, Qingdao, China

[a]skdliyong@163.com, [b]yanghongxi1228@163.com, [c]1428762897@qq.com

---

Abstract: Taking the longitudinal beam of a three-dimensional garage as the research object, the three-dimensional modeling software is used to establish a three-dimensional model. On the basis of the force analysis, the model is introduced into the ANSYS Workbench for the static strength analysis of the finite element. The analysis results show that the deformation of the middle section of the longitudinal shaft of the longitudinal beam is the largest, and the stress of the longitudinal beam head is the largest, but it is in the safe range.
Keywords: The Longitudinal beam of the carrier platform workbench strength analysis equivalent stress total deformation.

---

1. INTRODUCTION

Three-dimensional garage is with the economic development, urban population and vehicles increased, parking problems emerged after the new garage, it has a small footprint, more parking, less investment, advanced parking methods and other advantages, of which the vehicle platform is directly under the weight of the vehicle, the load-carrying platform is often reflected in the deformation of the car-mounted longitudinal beam or even fracture [1]. The deformation and even fracture of the longitudinal girder will not only affect the safety of the vehicle, but also affect the normal operation of the whole garage. Therefore, the strength and life of the longitudinal girder of the truck-mounted platform have a great influence on the reliability and safety of the stereoscopic garage and the performance of the stereo garage, so the strength analysis of the longitudinal beam of the vehicle is very important to ensure its safety.
The basic idea of finite element analysis is to simplify the complex problem and then solve it. It is an effective method to quickly solve the engineering analysis and calculation. This method does not require destructive tests. The structure strength can be predicted by computer simulation, and the design is reasonable and safe to reduce the design cost. Improve the design efficiency and reliability [2]. The ANSYS Workbench module uses the solver of ANSYS to analyze the structure. It is simple to load, and can directly load torque, bearing load, constraint and so on. The static strength analysis of the structure is completed. It is a necessary means of modern design [3].
In this paper, the force analysis of the carrier beam is carried out first. On this basis, the static analysis of the longitudinal beam is carried out by Workbench software, and the shortcomings

of the design are found through the analysis. At the same time, the results of the calculation and analysis are observed in real time by using the visualization technology provided by the software. The information can be used as a theoretical basis for structure optimization [4].

2. FORCE ANALYSIS

Figure 1 is the three-dimensional model of the whole carrier platform. The vehicle is parked on the bottom of the tray, and the force is acted on the longitudinal beam through the action of four hanging arms on the longitudinal beam. In order to simplify the model, the other parts other than the longitudinal beam are considered as a whole, and the whole carrier platform is in a stable state, the longitudinal beam uniform stress on the four connecting plate.

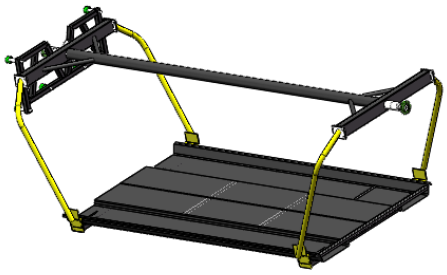

Fig 1. Model of the whole carrier platform

It is known that the weight of the ordinary car is G1=1.5 tons, the weight of pallets and four lifting arms is G2=0.5 tons, and the acceleration of gravity is g=9.8m/s2.
Total force F= (G1+G2) *g=2000*9.8=19600N.
The force of the joint plate of each longitudinal beam F1=F2=F3=F4=1/4F=4900N

3. THE ESTABLISHMENT OF A FINITE ELEMENT MODEL

3.1 Structure data

The longitudinal girder of the vehicle platform is composed of a longitudinal long axis, two transverse square tubes and four supporting short shafts, each part is connected by means of welding. The specific parameters are shown in table 1.

Table 1. Main component parameters of the longitudinal beam

Serial number	Name	Parameters
1	longitudinal long axis	127*6 circular tube L=4804mm
2	transverse square tube	150*100*8 Rectangular Hollow Steel L=1670mm
3	supporting short shaft	40*2 circular tube L=572mm

3.2 Finite element model

Using the three-dimensional modeling software to establish the longitudinal beam model, as shown in Figure 2.

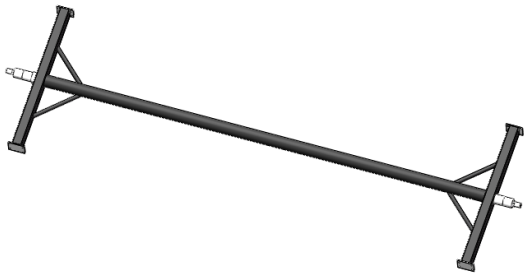

Fig.2 The longitudinal beam model

The longitudinal beam material properties as shown in table 2.

Table 2. The longitudinal beam material properties

Materials	Tensile strength	Yield strength	Elongation rate	Section shrinkage Rate
45 Steel	600MPa	355MPa	16%	40%

4. FINITE ELEMENT ANALYSIS

4.1 Grid division

Open the ANSYS/Workbench module and import the built 3D model. The three-dimensional finite element is selected for the whole structure, and the regular components are divided into hexahedral elements and the irregular shape is divided by tetrahedron. The number of nodes and the number of the elements of the rectangular column: 143825Nodes, 38684Elements. The grid division of the longitudinal beam of the carrier platform is shown in Figure 3.

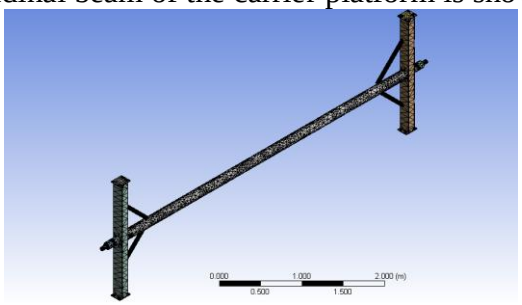

Fig 3. Finite element model

4.2 Add loads and constraints

According to the force analysis mentioned above, the load on the longitudinal beam of the loading platform is evenly distributed on four connecting plates, with a value of 4900N and a vertical downward direction. Because the axle head part of the car side longitudinal beam is connected with the main body of the garage through a bearing, the constraint is defined as a cylindrical constraint. The specific loading results are shown in Figure 4.

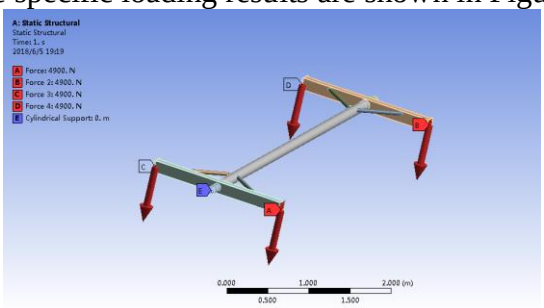

Fig 4. The model after loading and constraint

4.3 Result analysis

The material of the longitudinal beam is 45 steel, the yield limit of the material is 355MPa, and the stress result of the longitudinal beam of the vehicle platform is analyzed and calculated as shown in Fig. 5. It is shown from Fig. 5 that the maximum von-Misses stress is 122.8M pa< [σ] = 355M Pa, which is located in the shaft head part. Therefore, the longitudinal static strength satisfies the strength condition. After the deformation of the longitudinal beam is shown in Fig. 6, fig. 6 shows that the maximum deformation is 1.037mm, which is located in the middle part of the longitudinal Liang axis to meet the design requirements. The calculation results show that the structural design of the longitudinal girder satisfies the requirements of strength and rigidity and is reasonable in design.

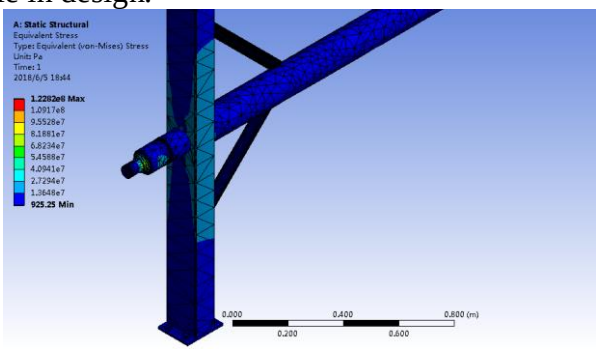

Fig 5. Equivalent stress cloud map

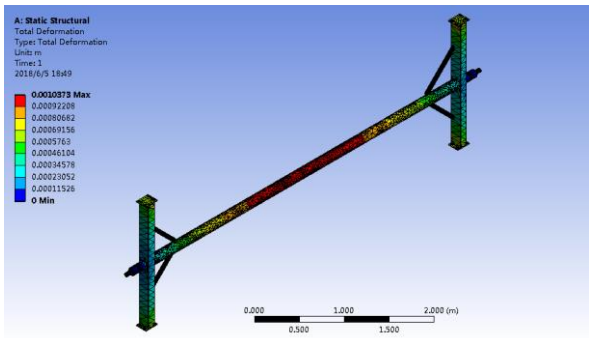

Fig. 6. Total deformation cloud map

5. CONCLUSION

In this paper, the strength analysis of longitudinal girder of vehicle-loading station is carried out, by simulating the actual load, we can know that the dangerous section of the longitudinal beam appears in the axle head part, the maximum stress is 122.8Mpa, but it is lower than the material yield strength and satisfies the strength condition. The maximum deformation position of the longitudinal girder occurs in the middle part of the longitudinal Liang axis, the deformation is 1.037mm to meet the design requirements. These conclusions can play a very good role in the design of the longitudinal girder of vehicle-loading platform.

REFERENCES

[1] Binging Han. Stability analysis of mechanical parking system based on ANSYS workbench [J]. Journal of Shanxi University of Science & Technology2013, 31(1):111-114.

[2] Peng Li. Analysis of mechanical properties of tendon bonding of wood products by finite element model [J]. Wood Processing Machinery, 2011, 2: 13-15.

[3] Jimson Xu. Design of driven shaft based on ANSYS Workbench [J]. Journal of Nantong Textile Vocational and Technical College, 2011, 9: 7-9.

[4] [Xing Li-ping .Strength analysis of the table saw shaft based on Workbench [J]. Wood Processing Machinery, 2012, 3: 3-5.