World Scientific Research Journal (WSRJ) ISSN: 2472-3703
www.wsr-j.org

Design of IGBT driver and protection circuit based on HCPL-316J

Nannan Liu [a], Zhaocan Gu [b], Zixin Zhang [c]

College of Mechanical and Electronic Engineering, Shandong University of Science and Technology, Qingdao, China.

[a]763093193@qq.com,[b]811563125@qq.com,[c]84169669@qq.com

Abstract: IGBT plays an important role in inverters and inverters. The correct operation of IGBT is the guarantee of the reliability of inverter (inverter). At the same time, IGBT fault protection is also an important part in the design of inverter (inverter). In this paper, the HCPL-316J optocoupler chip and the FP50R12KT4 model IGBT of Infineon are used as an example to design the driver and protection circuit of IGBT, and the reliability of the circuit is verified by experiments.
Keywords: IGBT, HCPL-316J, fault protection.

---

1. INTRODUCTION

IGBT is widely used in the industry due to its characteristics of high frequency interruption, high voltage resistance, low conduction impedance and convenient driving, especially in the frequency converter industry. The correct operation of IGBT depends on the rationality of the driving circuit. The good driving circuit can be integrated with the set drive and protection, which greatly simplifies the circuit design and improves the safety and reliability of the product. The application circuit of the HCPL-316J is shown in Fig.1.

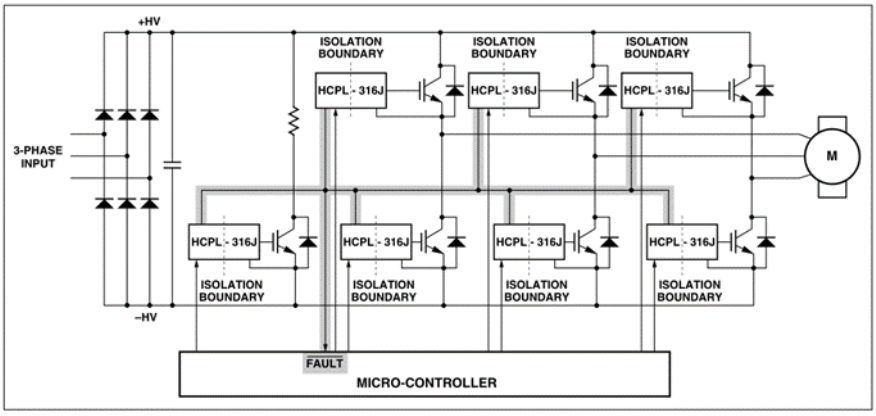

Fig.1 Structural block diagram of HCPL-316J and FP50R12KT4 applications

FP50R12KT4 is a Infineon Corporation EconoPIMTM 2 series product, which integrates a three-phase rectifier bridge, a brake chopper, a three-phase inverter bridge, and a NTC thermistor used to measure temperature, with a blocking voltage of 1200 V. HCPL-316J is a

IGBT driven optocoupler with an output of up to 2A and over current protection by Agilent, which can drive IGBT to the highest level of 150A/1200V, optical isolation, fault feedback output, soft turn off technology, integrated over current, undervoltage protection.

2. DRIVE CIRCUIT DESIGN

2.1 The working principle of 316J

The internal structure of the HCPL-316J is shown in Fig.2.

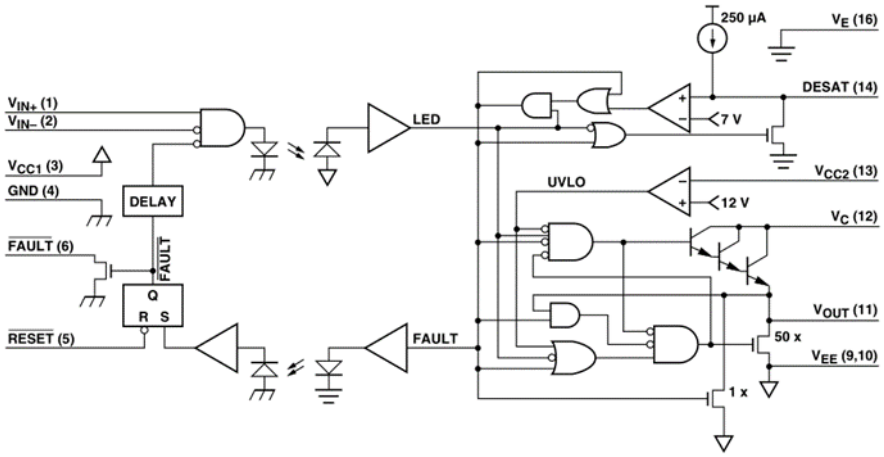

Fig.2 HCPL-316J's internal structure diagram

316J has two triggering modes, one is low - level, VIN+ keeps high, VIN- is triggered, and the other is high - level, VIN- keeps low and VIN+ is triggered. The chip has three internal signal control devices: the state of the signal LED, the UVLO and the fault signal. If no fault is detected on the IGBT collector and the supply voltage is higher than the UVLO threshold, the LED signal will control the output state of the device. The device logic level includes an interlock to ensure that the up and down devices in the output stage will not be open at the same time. If the under voltage condition is detected, the output will be pulled down by 50 times DMOS regardless of the state of the LED. If the IGBT saturation fault is detected when the signal LED is up, the fault signal will be locked at the high level. Darlington and 50 times DMOS devices are disabled, and a smaller 1 times DMOS drop-down device is activated to slow the discharge of the IGBT gate. When the output drops below 2V, the 50x DMOS device is turned on again, and the IGBT grid is firmly clamped on the VEE. The fault signal remains locked in the high level until the signal LED is extinguished.

2.2 The application circuit of 316J

The driving circuit of the middle and lower bridge of one phase is given in Fig. 3, and the rest of the circuits are the same.

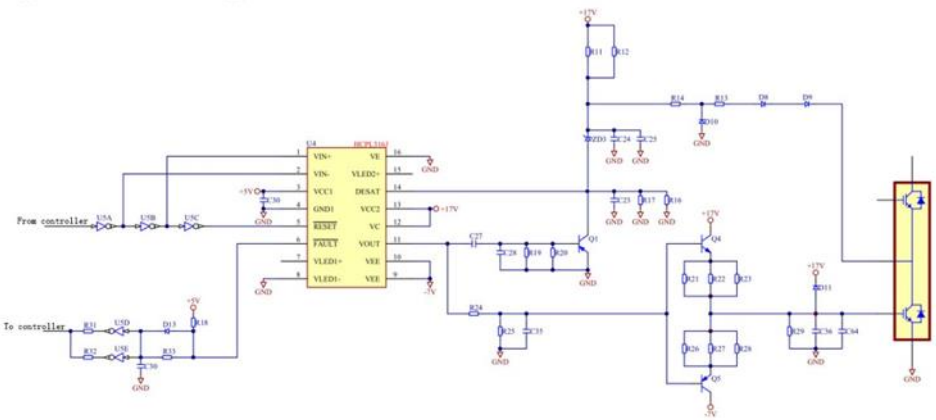

Fig.3 HCPL-316J application circuit

When IGBT is connected, the current flowing out of the constant current source inside the chip passes through the voltage drop VR13, VR14, VD8 and VD9 produced by the resistance R13, R14 and the diode D8 and D9, plus the Vce on the tube pressure drop of the IGBT conduction. At that time , the IGBT appeared over current situation: first, the output became lower, closed and locked to prevent the flow passing through the current. Further rise. At the same time, the fault signal of pin 6 immediately changes to a low level to send to the controller, and the controller controls the PWM signal according to the signal. The controller begins in the next PWM period after receiving the fault signal. If the PWM signal is sent, the PWM signal of low power will be used as the RESET reset signal, and the IGBT is allowed to reopen again. This cycle is repeated to achieve current protection.

3. EXPERIMRNTAL ANALYSIS

The above circuit is put into production. It is made into a PCB board, after the manual welding of the components, and then a device to test the IGBT drive board before it is combined (the device is used to simulate the PWM waveform and the fault prompt), as well as the multimeter, the 24V switch power, the oscilloscope and so on. The related materials such as Fig.4. As shown, the lower part of the diagram is the positive and negative side of the PCB plate.

PCB board contains U, V, W three-phase drive circuit, this test is connected to the lower bridge of IGBT, and the oscilloscope is used to measure W phase. The Yellow waveform is the control signal of the G pole of the bridge in the W phase, and the blue waveform is measured by the overvoltage of the driving plate.

First, the measurement device analog controller runs, that is, the control board sends out the PWM signal to the drive board. Under the normal connection of the circuit, the drive board will signal the G pole of the W phase of the IGBT under the PWM signal, controlling the IGBT conduction or closing. The running waveform at this time is shown in Fig.5.

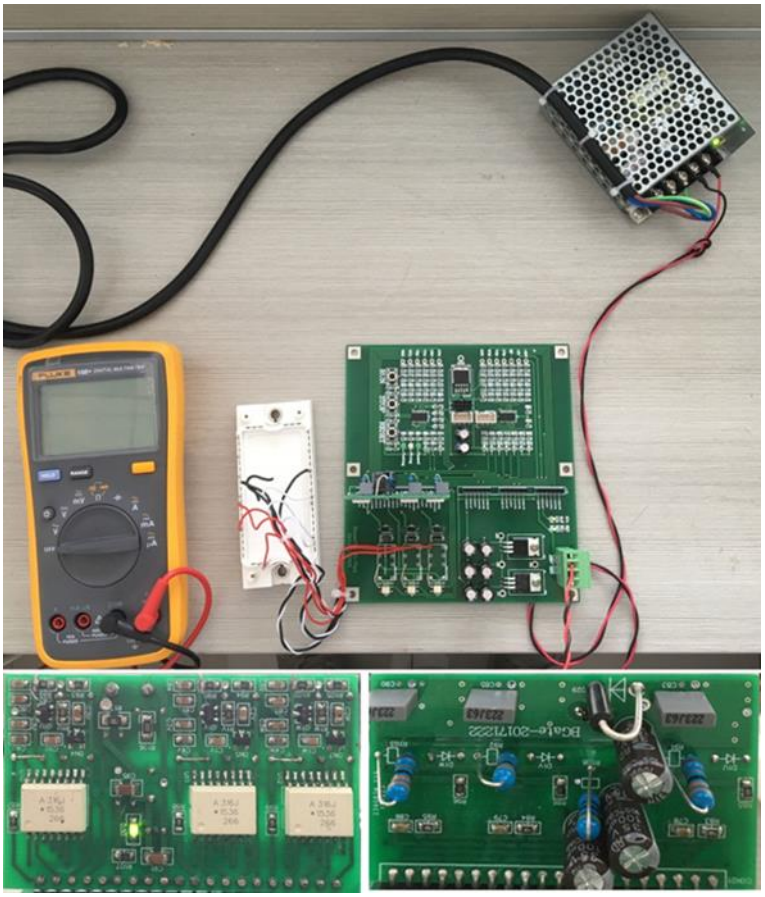

Fig.4 Experimental equipment and PCB circuit board

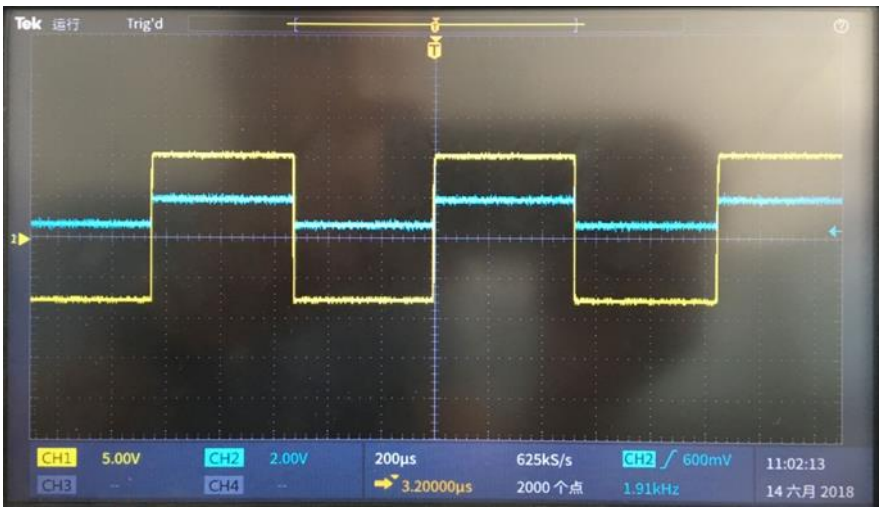

Fig.5 W phase operation waveform

From the Yellow wave of Fig.5, we can see that the conduction voltage of G pole is about 10V, and the turn off voltage is about -7V. The negative voltage is used to shorten the IGBT turn off time. The two is to avoid the IGBT malfunction when the G pole voltage fluctuates. The blue waveform is an overvoltage detection waveform. When the voltage of the waveform exceeds 7V, an overvoltage fault will occur. The waveform will generate a rising edge along with the conduction of the G pole, where the voltage is easy to pump. If the processing is not good, it will cause an overcurrent fault. The detail is amplified in Fig.6. It can be seen that the

waveform generates a pull down voltage at the moment of rising, avoiding the pump rise waveform at the moment of IGBT conduction, thus avoiding unnecessary error faults.

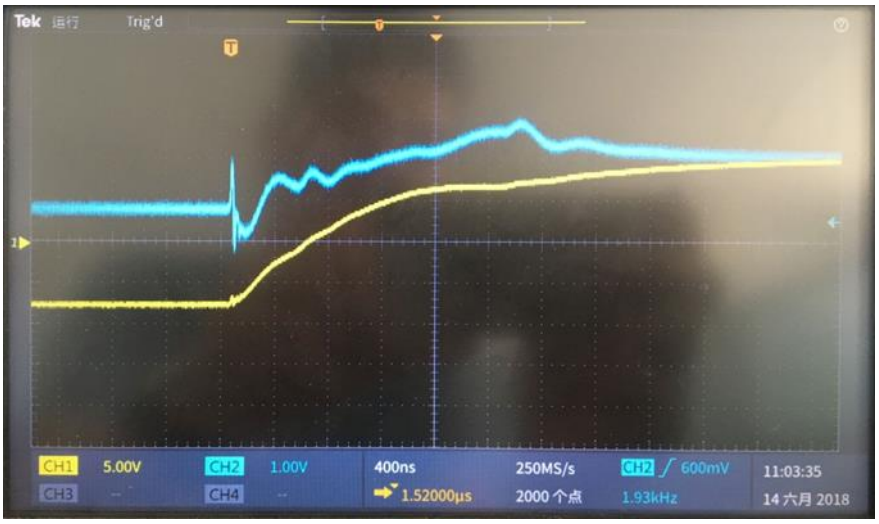

Fig.6 Overvoltage detection waveform

When a fault occurs, such as undervoltage, overcurrent and other faults, IGBT can be shut down in the shortest time to avoid serious accidents. Fig.7 shows the fault waveform generated by running the driver in the case of IGBT burnout. At the moment of IGBT conduction, the driver works like normal. When the detection circuit finds a IGBT fault, the voltage drops at the same time, and controls the G pole voltage drop of the IGBT until completely shut down, and the whole process is controlled within 20 subtleties.

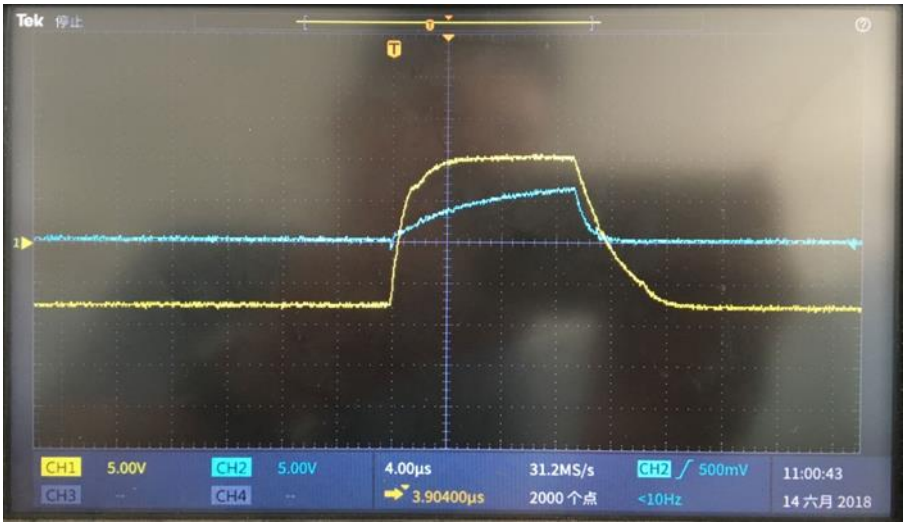

Fig.7 Fault waveform

4. CONCLUSION

The design of the circuit optimizes the driving waveform of IGBT, especially at the moment of IGBT conduction, which makes the voltage of the detection circuit reduced instantaneously, and avoids the misoperation caused by the interference of the pump voltage. The second is that there is a great advantage in the time of the fault response, which improves the efficiency of protection and can greatly reduce the occurrence of major accidents. Rate. Furthermore, the

drive circuit can be adapted to the IGBT of different power. By adjusting the voltage regulator diode, the level of overcurrent detection can be changed and the adaptability is greatly improved. Experiments show that the driving circuit has high reliability and can be well applied in the industry.

REFERENCES

[1] Chen Yuhui. Optocoupler HCPL-316J application [J]. Power electronics device. 2011, 13 (9), 11-14.

[2] Lian Xiao Fan. Talking about the application of optocoupler ACPL-332J in frequency converter [J]. Instrument technology.2010, 02 (20), 58-60.

[3] Chen Bo Shi. Electric drive automatic control system [M]. Beijing: Machinery Industry Press, 1992.

[4] English Handbook: "HCPL-316J".