World Scientific Research Journal (WSRJ) ISSN: 2472-3703
www.wsr-j.org

Development and Application of Reciprocating Friction Experimental Device

Nannan Liu [a], Zhaocan Gu [b], Huimin Sun [c]

College of Mechanical and Electronic Engineering, Shandong University of Science and Technology, Qingdao, 266590, China.

[a]763093193@qq.com,[b]811563125@qq.com, [c]1281808102@qq.com

---

Abstract: This paper designs a reciprocating friction experimental device, and introduces the three aspects of system principle, structure design and working principle. The reciprocating friction experimental device consists of three parts: mechanical transmission system, detection system and control system. The feasibility of the experimental device was verified by conducting contact experiments on aluminum alloy-hemispherical raised silicone rubber textures.
Keywords: friction, mechanical transmission system, detection system, control system.

---

1. INTRODUCTION

Tribology is a marginal discipline that studies friction, lubrication, and wear between interacting surfaces, as well as the basic theory and practice of the interrelationship between the three surfaces, and aims to study the laws of interaction between surfaces [1]. Friction, as one of the basic phenomena in the natural world, is widely found in people's daily lives and mechanical systems. In most cases, mechanical system friction will cause power loss and equipment wear, but there are also some mechanical devices that rely on the presence of friction, such as conveyor belts, tires, and so on. In order to enhance people's understanding of the nature of friction, researchers proposed a variety of experimental devices for friction research. Wei Lin et al. proposed a new type of friction experimental device and measured the static and dynamic friction coefficients between the two materials through experiments. The experimental results show that the designed experimental device has good experimental and reliability [2]. Lu Yubin et al. designed a new type of dynamic friction experimental device to measure the dynamic friction coefficient within 10m/s of the relative sliding speed [3].

2. DESIGN OF RECIPROCATING FRICTION EXPERIMENT DEVICE

A reciprocating friction experiment device introduced in this paper is a screw-driven transmission mechanism. The stepping motor drives the screw to drive the whole experimental

device to reciprocate. The friction test plate can be replaced at any time to meet the requirements of the experiment.

2.1 Experimental System Principle of Reciprocating Friction Experimental Device

When using this test stand to measure the coefficient of friction or static friction coefficient and friction force, the stepping motor is powered to drive the screw to rotate, thereby driving the sub-contact body to reciprocate because the upper surface of the sub-contact body is the lower contact surface and the main body. The presence of friction between the lower surface of the contact body, that is, the upper friction surface, causes the main contact body to reciprocate or reciprocate, thereby generating frictional force. Then by pulling the pressure sensor, the acquisition card will collect and record the friction. During the experiment, the screw reciprocates at 4cm/s, which drives the secondary contact body to make a uniform reciprocating movement. Ignore the resistance effect of the experimental system. The measured tension value is the friction force of the bionic rubber surface, and the equivalent surface friction of the bionic rubber surface. The coefficient is:

$$f_v = \frac{F_{f\max}}{F_n}$$

2.2 The composition and construction of the experimental device

The reciprocating friction test device consists of three parts: a mechanical transmission system, a detection system, and a control system. The mechanical transmission system includes: stepper motor 1, driver, coupling 2, guide rail 3, lead screw 4, left support 5, screw 6, slide 13, right support 11, test plate 7, bearing 8, bearing frame 9. The three-dimensional map is shown in Fig. 1; the detection system includes: pull pressure sensor 10, acquisition card, transmitter, gravity sensor 12, weighing digital display, upper computer, etc.; control system includes: 24V switching power supply, programmable step into the motor controller.

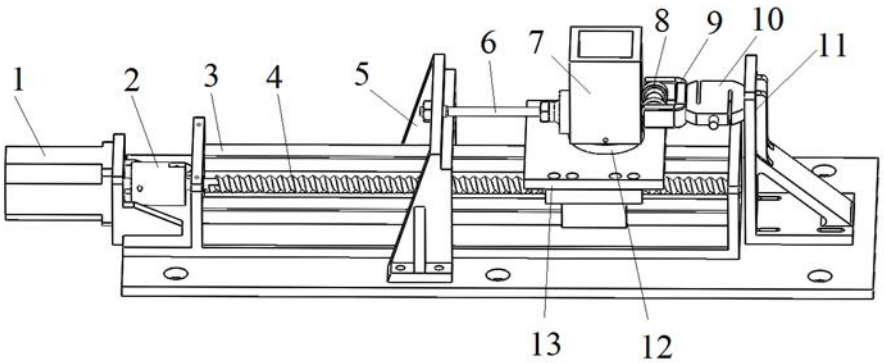

Fig.1 3D illustration of mechanical transmission system

The experimental device described in this article has the following advantages: 1. by controlling the speed of the stepper motor, the speed of the experimental device can be adjusted in a timely manner, and the reciprocating displacement of the experimental device can be adjusted. 2. The experimental device is designed with a loading mechanism and real-time monitoring of the pressure exerted by the loading mechanism on the experimental device

through the sensor. 3, using zero angle test, the absolute value of the sensor measured tension is the friction force. 4, can study the friction coefficient of different materials, and the experimental device can easily replace the test board. 5, simple structure, easy assembly, low price, suitable for experimental research by researchers.

2.3 Experimental Results and Discussion

Using this experimental setup, experiments were conducted on aluminum alloy-hemispherical raised silicone rubber textures. A rubber surface with hemispherical projections is adhered to the lower surface of the main contact body, and a smooth rigid body is adhered to the upper surface of the subcontact body. Open the air switch QF, 24V switching power supply and 48V switching power supply start working, the controller and the driver to start working, press the controller's start button, enter the program on the controller, so that the screw to do 4cm / s speed In reciprocating motion, the controller sends the coded signal to the driver. The driver then converts this signal into a drive signal, drives the stepper motor to rotate, and periodically switches the direction of rotation.

The stepper motor rotates to drive the screw to rotate through the coupling so that the slider moves horizontally. Since the stepping motor periodically switches the direction of rotation, the sliding plate performs a horizontal reciprocating motion at a fixed distance. When the slider moves to the right, under the effect of static friction, the test plate will move to the right. Because of the blocking effect of the bearing set, the test plate cannot move to the right, so the slider has a relative displacement, resulting in sliding friction. The friction force will be transmitted to the pull pressure sensor along the bearing group, and the sensor will generate the corresponding electrical signal. The electrical signal is converted into the standard 0-10V voltage by the transmitter and transmitted to the upper computer through the acquisition card.

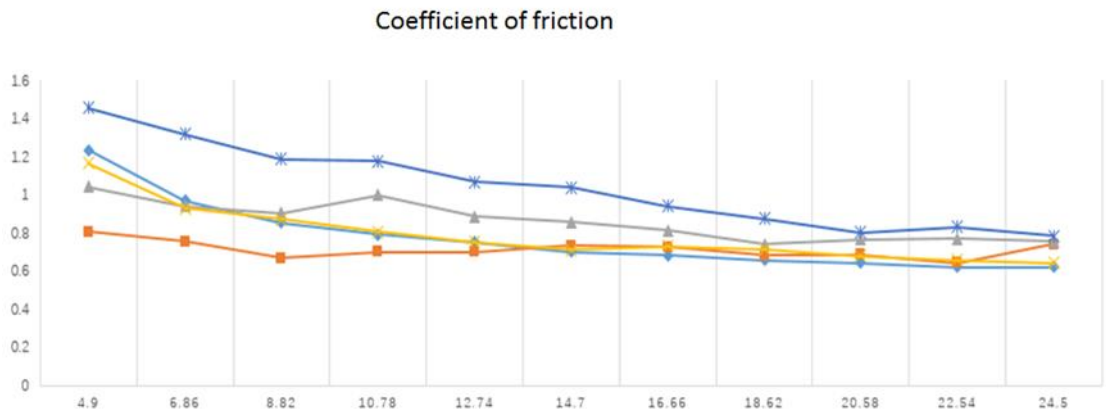

Fig.2 The experimental results

3. CONCLUSION

The experimental results show that as the positive pressure increases, the friction coefficient decreases gradually, which proves that the reciprocating friction test device is feasible and has marketability.

REFERENCES

[1] Ji Jinghu. Theory and experimental study on the relative tribology of microgroove textures on friction surfaces[D]. Zhenjiang: Jiangsu University, 2012.

[2] Wei Lin, Liu Wuxiang, Fang Mingxia, Zhu Jinlong. Development and application of a novel frictional experimental device[J]. Laboratory Research and Exploration, 2011, (06):30-32.

[3] Lu Yubin, Li Ke, Teng Wei. Verification of a Novel Dynamic Friction Experimental Device [J]. Journal of Southwest University of Science and Technology, 2014, (02): 56-59.