World Scientific Research Journal (WSRJ) ISSN: 2472-3703
www.wsr-j.org

# Dynamic Analyses of Isolated Reinforced Concrete Frame Using Different Programs

An Dong[1, a]

[1]School of Civil Engineering, North China University of Technology, Beijing, China

[a]hadesloveln@163.com

---

*Abstract: This paper mainly introduces the method of dynamic analysis of isolated reinforced concrete frame structure using SeismoStruct. The finite element model of isolated frame structure is established by SeismoStruct, the dynamic time history analysis is carried out, and the normal structure is compared. The periodic change, stiffness change and displacement response of the isolated structure are studied. Then OpenSEES and SAP2000 are used for dynamic analysis of the same isolated structure, and the difference among results of the three software is compared.*
*Keywords: Isolated frame, dynamic analysis, SeismoStuct, OpenSEES, SAP2000.*

---

## 1. INTRODUCTION

Compared with the traditional seismic structure, the isolation structure has a good performance in the earthquake, because the horizontal stiffness of the isolation layer is far smaller than the lateral stiffness of the upper structure, and it has a better ability to resist the horizontal earthquake collapse. After nearly thirty years of research, seismic isolation technology has made great achievements in applied basic theory and engineering application. Isolation is designed to remove the coupling relationship between the structure and the ground motion. By increasing the flexibility of the structure and providing additional damping to reduce the seismic action in the structure, the larger displacement of the structure can be provided by the isolation layer set by the bottom of the superstructure and the top of the foundation [1-3]. In recent years, a lot of experimental research on isolation structure has been carried out in China [4-5], and the finite element analysis is also an important part of the dynamic analysis of structure [6]. Therefore, this paper uses a variety of software to analyze the dynamic analysis of the isolation structure and verify its rationality.

In this paper, based on the seismic isolation structure, the finite element model is established by SeismoStruct, the dynamic time history analysis is carried out, and the normal structure is compared. The periodic change, stiffness change and displacement response of the isolated structure are studied. Then OpenSEES and SAP2000 are used for dynamic analysis of the same isolated structure, and the difference among results of the three software is compared.

## 2. SEISMOSTRUCT Model AND Assumptions

### 2.1 Model

An analytical model has been made through the computer software Seismostruct to achieve an analytical representation of the seismic response of the isolated frame. A detailed representation of the building geometry has been achieved, by tracing the original architectural and structural drawings. The layout of the isolated reinforced concrete frame structure is shown in Fig.1. The X direction and Y direction are two span, with a span of 4.0 m and 5.0 m, a total of 12 layers, the first floor height of 3.5 m and the rest height of 3.0 m. The section size of the column is 450 mm x 450 mm, the section size of the beam is 300 mm x 600 mm, and the floor thickness is 250 mm. Uniformly distributed load and the live load were 2.5 kN/m2 and 2.0 kN/m2, respectively. The strength grade of beam, slab and column is C30, and the longitudinal reinforcement is HRB400. The mechanical properties of the materials have been carefully checked during the knowledge process, but in the current analysis only the concrete Young modulus is adopted, which is assumed to be equal to 24820 Mpa, and reinforcement steel is 200000 Map.

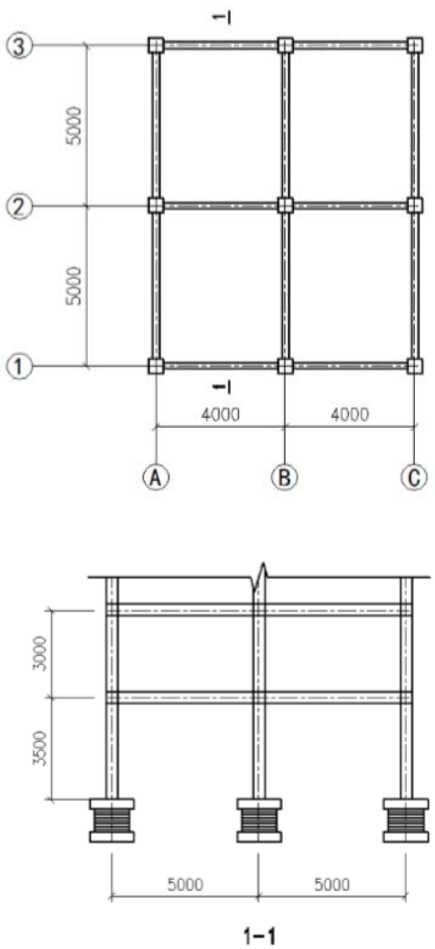


Fig 1. Structure layout

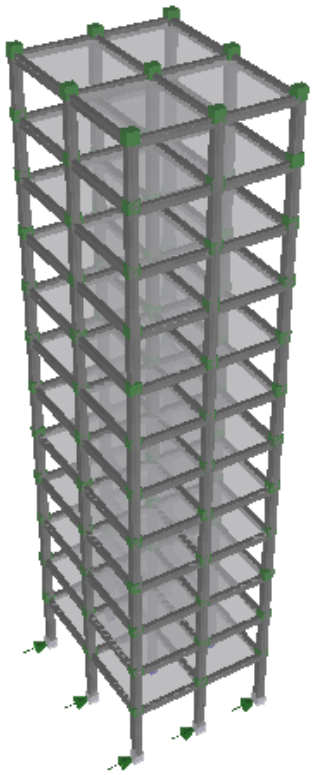

Fig 2. SeismoStruct model

**2.2 Structural Elements**

A fiber model has been adopted to describe the cross sections; the elastic materials model has been assumed for the concrete and reinforcement steel. Contribution of floor slabs has been considered by introducing a rigid diaphragm. Link unit is applied for isolation bearing. Fig. 2 shows two views of the model adopted in the analysis.

**2.3 Earthquake Loading**

Accelerogram implemented on the model was shown in Fig. 3. As shown is Fig.2, the green arrows, the loadings were applied in transversal directions of the structure.

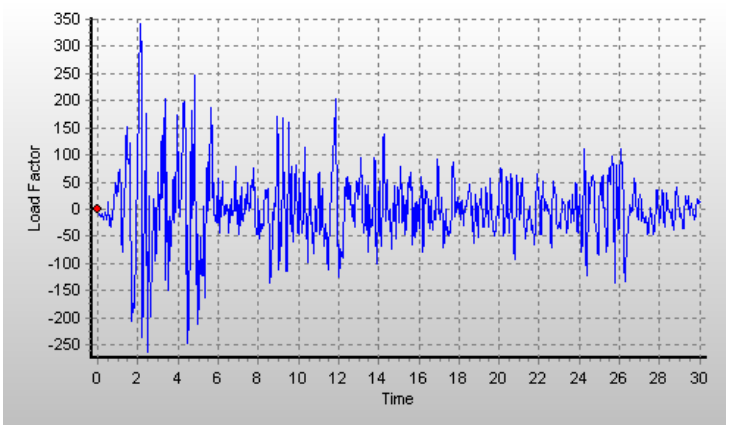


Fig 3. Accelerogram (mm/s2)

## 3. RESULTS AND ANALYSIS

### 3.1 Displacement Response

The isolation support will reduce the stiffness of the structure. Therefore, the increase of the absolute displacement at the vertex of the structure after the isolation bearing is increased is inevitable. However, it can be found that the seismic energy input to the superstructure is greatly reduced because of the existence of the isolation bearing, and the former is smaller than the latter, compared with the displacement of the structure relative to the bottom of the column.

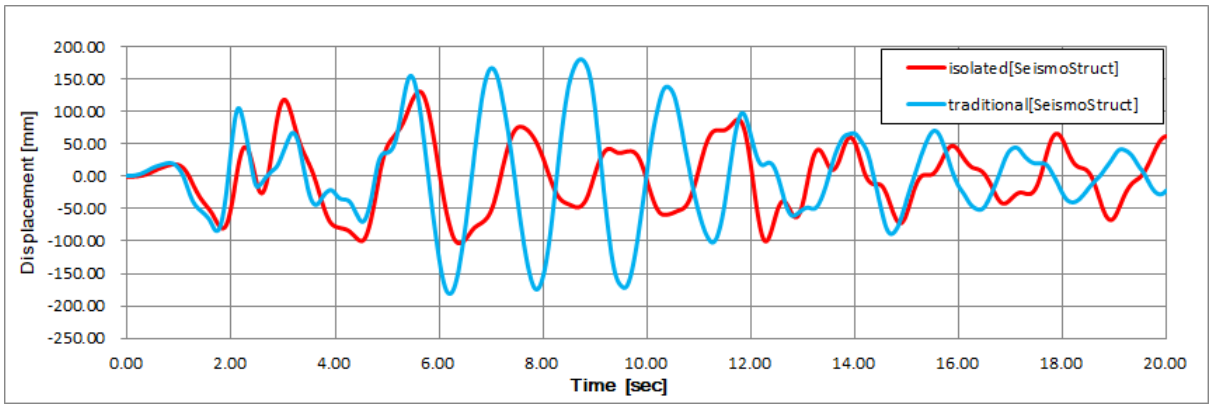


Fig 4.Displacement response of isolated structure and traditional structure using SeismoStrcut

In OpenSEES, zeroLength element is used to simulate isolation bearings. Using OpenSees and SAP2000 to establish the same model, compared with the results of OpenSees and SAP2000, the accuracy of the model is illustrated by the small deviation between the vertex displacement and the first column axial force for the common structure and the isolation structure.

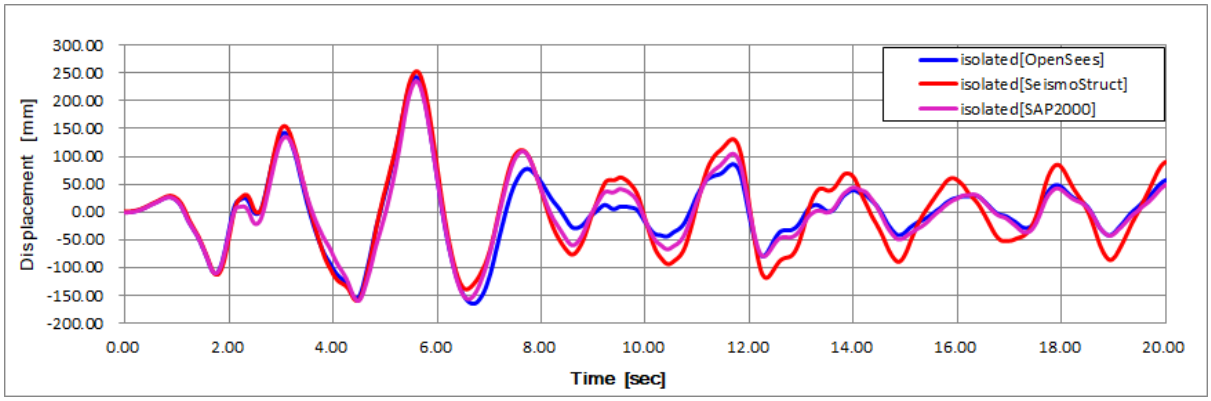


Fig 5. Displacement response of isolated structure using SeismoStrcut/OpenSEES/SAP2000

### 3.2 Period

The period of the reinforced concrete structure is 1.73s, and the isolated reinforced concrete structure is 2.17s. Compared with that of the latter, the period is 25.4% longer than that of the former.

## 4. CONCLUSION

In the paper, the model of isolated reinforced concrete frame structure is established by SeismoStruct, displacement response of isolated frame structure in earthquake is obtained by the same software. Meanwhile, the response of isolated structure is calculated by OpenSEES and SAP2000. Compared with the results of Open Sees/SAP2000 and SeismoStrcut, the accuracy of the model is illustrated.

## ACKNOWLEDGEMENTS

This paper was supported by the Youth Talent Support Program of North China University of Technology (XN018034). The authors' deeply express sincerely appreciation to them.

## REFERENCES

[1] Tan Ping, Zhou Fulin. Research and application of seismic isolation system for civil engineering structures [J]. Construction Technology, 2008, 37(10): 5-8, 42.

[2] Qu Zhe, Ye Lieping, Pan Peng. Theory and techniques of seismic isolation in high-rise buildings [J]. Earthquake Resistant Engineering and Retrofitting, 2009, 31(5): 51, 58-62.

[3] Zhou Xiyuan, Yan Weiming, Yang Runlin. Seismic base isolation, energy dissipation and vibration control of building structures [J]. Journal of Building Structures, 2002, 12(2): 2-12, 26.

[4] Wu Zhongtie, Fan Pingping, Du Yongfeng, Cheng Xuansheng. Study on effect of seismic wave parameters and seismic mitigation performance of based isolated structure through serial seismic tests [J]. Journal of Building Structures, 2018, 39(8): 138-147.

[5] Wan Run, Wang Hui, Sun Yuping, Du Yongfeng, Wang Xueping, Wu Zhongtie. Numerical and experimental evaluations of base-isolated structure considering bearing isolation behaviors based on multiscale model [J]. Engineering Mechanics, 2018, 35(6): 115-131.

[6] Vertical progressive collapse mechanism and influencing factors of base-isolated structures Du Yongfeng, Duan Haocai, Xu Tianni [J]. Journal of Vibration and Shock, 2018, 37(5): 257-264.