World Scientific Research Journal (WSRJ) ISSN: 2472-3703
www.wsr-j.org

Modal Analysis on Transmission System of Super-High Torque and High-precision Indexing Rotary Device

Jun Xie[1, a], Yan Shi[1, b], Bing Hu[1, c], Yinghua Liao[1, d]

[1]Sichuan University of Science & Engineering, Yibin, 644000, China

[a]junxie0204@163.com, [b]408624969@qq.com, [c]404071135@qq.com, [d]191151820@qq.com

---

Abstract: In the indexing rotary device, the transmission component is its key component. In order to obtain the transmission component with strong bearing capacity and reasonable structure, the finite element and elastic mechanics theory is applied to establish the three-dimensional finite element model of the transmission component, and the modal analysis theory is utilized. Perform modal analysis to obtain modal parameters such as the natural frequency of the transmission component and the main vibration mode. The analysis results show that the first-order natural frequency of the transmission component of the indexing slewing device is not within the range of the excitation force excitation frequency and will not cause vibration. The research results provide theoretical basis and basis for vibration characteristics analysis, vibration fault diagnosis and prediction, and dynamic performance optimization design of the transmission components of the indexing rotary device.
Keywords: Finite element, natural frequency, vibration.

---

1. INTRODUCTION

At this stage, the equipment in the mechanical field is developing towards high speed, high precision and high intelligence, and the requirements for mechanical equipment are getting higher and higher [1]. The worm gear mechanism is commonly used to transmit the motion and power between the two staggered shafts, and can obtain a large transmission ratio. The load capacity is large, the transmission is stable, the noise is small, and the self-locking property is achieved. Therefore, the worm gear mechanism is widely applied to the speed reducer, high-pressure pumps, elevators and other equipment [2-3]. In the large-scale high-precision super-large torque indexing rotary device, the worm and worm gear transmission is also adopted. In order to ensure the stability of the device during operation, it is necessary to perform overall modal analysis on the worm gear and the main shaft to find the natural frequency and vibration mode to avoid the indexing disk that makes the rotary motion resonates and minimizes its influence on the machining accuracy [4-6]. In this paper, the three-dimensional model of the worm gear and the main shaft is drawn by Pro/E

three-dimensional drawing software, and they are modally analyzed based on ANSYS Workbench.

2. PRETREATMENT

2.1 Import model

All three-dimensional modeling of the transmission components of the indexing slewing device is completed by P/roe, and the worm gear and the spindle are assembled and exported to the common format stp-file supported by Workbench. The ANSYS Workbench DM module has modeling capabilities, while the DM is cumbersome to operate and the modeling is not efficient, but the module could be still used to simplify the imported model. Due to the many bolt holes and some rounded corners on the upper end of the spindle, this is very unfavorable for meshing. In the modal part, this article focuses on the overall situation. These small details are not enough to affect the analysis, so you can use the DM module. The function removes the bolt holes and fillet features, and the appropriate simplification of the model is beneficial for subsequent analysis.

2.2 Material selection

Modal analysis is actually the process of decoupling the vibration equation. According to the vibration equation, mass, stiffness and damping are needed. The stiffness is related to the elastic modulus and Poisson's ratio of the material. To know the quality, the density needs to be known, so the modal analysis needs there are three material property parameters: density, modulus of elasticity, and Poisson's ratio. Both the main shaft and the worm are structural steel, and the worm wheel is a copper alloy. According to Table 1, the corresponding materials are added to the three components and the material property parameters are modified.

Table 1. Material parameters

name	mateial	density	modulus of elasticity	poisson's ratio	Yield strength
spindle	40cr	7.87×10^3 kg/m^3	211 GPa	0.277	785MPa
worm gear	ZCuSn10P1	8.76×10^3 kg/m^3	103 GPa	0.3	170 MPa
Worm	20CrMnTi	7.8×10^3 kg/m^3	207 GPa	0.25	835 MPa

2.3 Meshing

In order to save time, the mesh of three components is directly controlled by grid, which is divided into 10-node tetrahedral Solid187 units. After unit division, there are 200,000 units and 300,000 unit nodes. As shown in Figure 1.

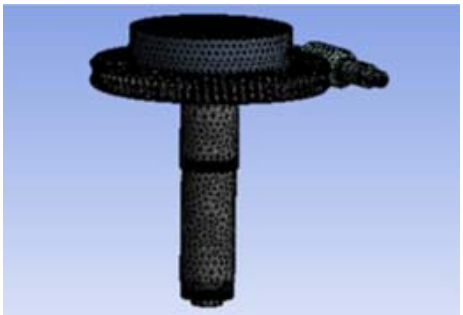

Fig 1. Mesh Generation

2.4 Set boundary conditions

As shown in Figures 2 and 3, a fixed constraint is applied to one end face of the worm, and a frictionless constraint is imposed on the main shaft subject to the bearing constraint.

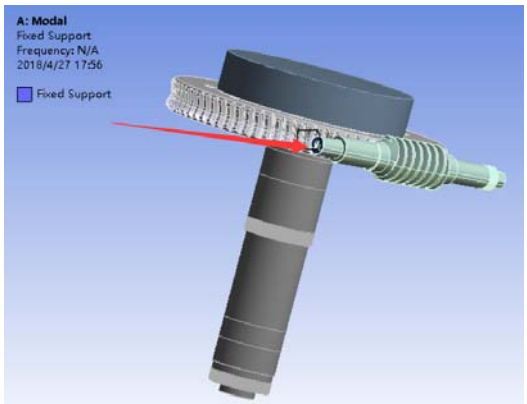

Fig 2. Constrained boundary condition

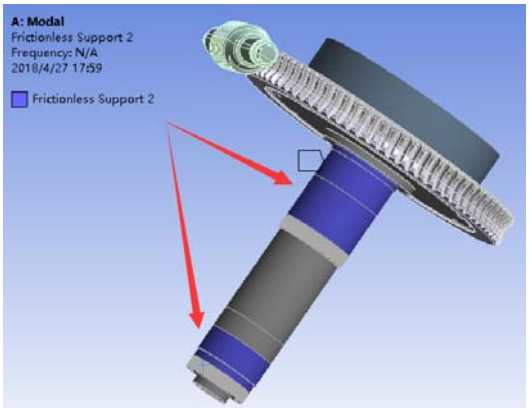

Fig 3. Friction constraint boundary condition

2.5 Solving

As shown in Figure 4, the modal order of the required solution is set to 6, and then the solution of the first six modal modes is started.

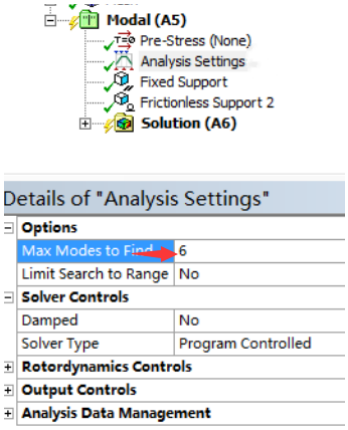

Fig 4. Analysis settings

3. POST PROCESSING

After the solution is completed, the obtained data is derived, and the modal values of each order in Table2 are obtained. The numerical values indicate that the modal frequency range of the analysis is about 200~600 Hz. When the frequency of the external excitation is close to the value in the table, resonance may occur. High amplitude is generated to damage the transmission member. The modal effects of the first three orders will be very large, namely 200.27 Hz, 292.3 Hz, and 308.58 Hz, and the second and third order modal frequencies are all close to 300 Hz, so at least frequencies near 200 Hz and 300 Hz should be avoided.

Table 2. Material parameters

Mode	Frequency[Hz]
1	200.27
2	293.3
3	308.58
4	330.24
5	373.86
6	621.48

The first three specific modal analysis diagrams are shown in Figure 5. It can be observed from the derived animation that the first-order mode shape is mainly the up and down vibration of one end of the worm, the second-order mode is the left and right vibration of the worm and the slight rotation of the worm wheel in the circumferential direction, and the third-order mode is the left and right vibration of the worm and the worm wheel. Swing along the Y axis.

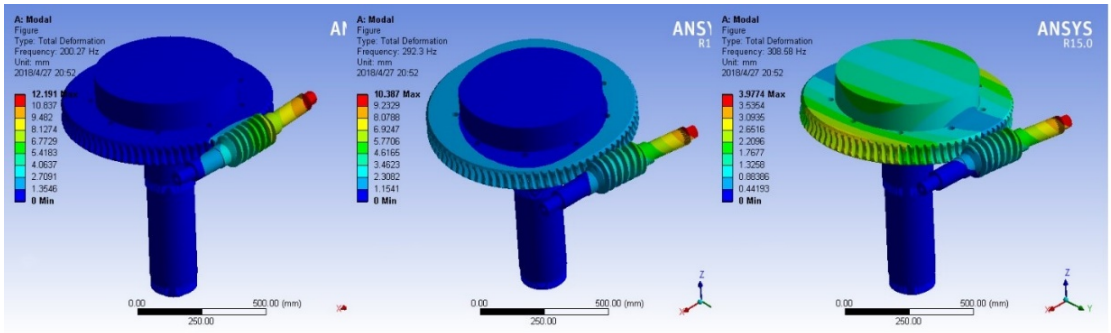

Fig 5. Third-order mode

The position of the first three-order mode maximum deformation occurs at one end of the worm, and the maximum deformation of the first-order mode and the second-order mode is greater than 10 mm, which is likely to cause concern and doubt, but it is not known whether it will affect the structural stability of the entire device. Therefore, this paper proposes a hypothesis to solve such a problem. It is assumed that this deformation does not affect the stability of the structure. It can be explained from this angle: the vibration of each mode is not the true vibration of the finite element model, but true. The situation is the coupling effect of each order. In structural vibration, the high-order modal energy ratio is too low, and has little effect on the vibration of the entire structure. The influence of the previous orders is more obvious, and the influence of the higher order is smaller. In the case where the external stimulus is far from reaching the first few frequencies, no problem will occur.

It is also assumed that the amount of deformation will affect the stability of the structure. For example, when the external excitation can reach the front-end frequency, then it is necessary to re-improve and analyze. One end of the worm is fixed, and the other end is vibrated and deformed. It is conceivable to add an object with a certain constraint on the position between the two ends. In fact, in this device, one end of the worm fixing constraint is connected with a coupling, and the other end has a bearing, and the constraint of the coupling and the bearing can be simulated by applying a boundary condition without friction constraint. In the following article, we will re-optimize the analysis with this idea.

4. OPTIMIZATION ANALYSIS

The frictionless constraint is added only to the surface of the worm at the position shown in Figure 6, and the other positional boundary conditions remain unchanged.

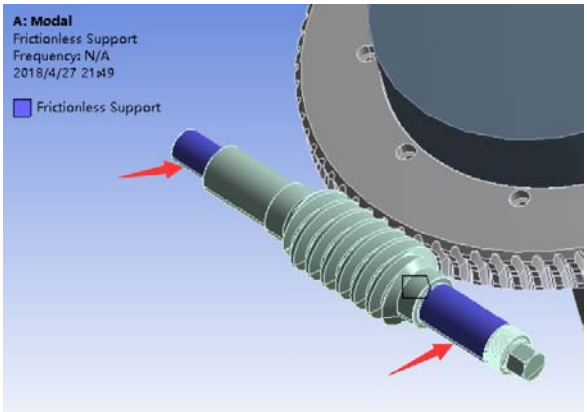

Fig 6. Friction-free boundary conditions

After the solution, the first-order mode shape is the oscillating motion of the worm wheel along the Y-axis, and the second-order mode is the circumferential rotation of the worm wheel portion and the partial oscillation along the Y-axis. At the same time, the middle part of the worm is slightly curved to the left and right, and the third-order mode It is the swing of the worm wheel along the Y axis and the slight bending of the worm up and down. The first three modes are shown in Figure 7. The deformation is less than 3mm, which will never cause any further concern.

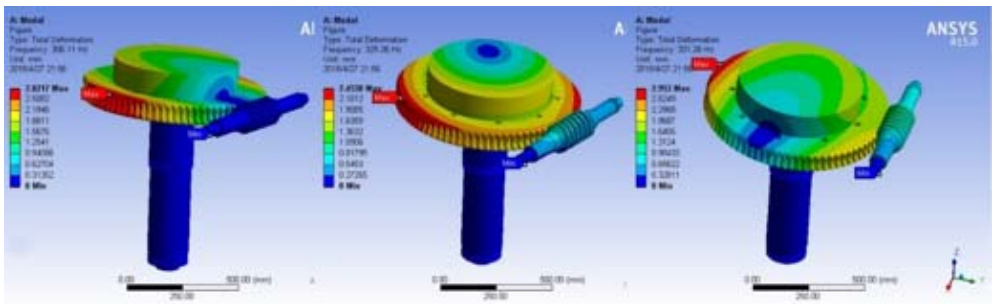

Fig 7. Optimized first three modes

Finally, observe the first six modal tables. As shown in Table 3, the overall frequency is improved compared with that before the improved analysis. The first three frequencies are relatively concentrated, in the range of 306~332Hz, this will not cause vibration.

Table 3. Material parameters

Mode	Frequency[Hz]
1	306.11
2	329.26
3	331.26
4	708.06
5	819.08
6	823.78

5. CONCLUSIONS

The modal analysis of the transmission components of the indexing slewing device is carried out by ANSYS Workbench. In the two analyses, the position of the first three-order mode shape is different from the position where the stress is large in the previous analysis, so the self-owned frequency is not easy to cause damage to the component. In fact, in the ultra-low speed of large-scale high-precision super-large torque indexing slewing device, it is difficult to achieve the own frequency cycle in either the first time or the second analysis, but the analysis method is the indexing slewing device transmission. It provides a basis for modal testing, transient analysis, and manufacturing of components, and provides an analytical approach for other similar analyses in the future.

ACKNOWLEDGEMENTS

This paper was supported by the Education Office of Sichuan Province (18TD0029), the Science & Technology Department of Sichuan Province (2017JY0148), the Science and Engineering of Science University (2016RCL01, y2017024), the Sichuan Provincial Key Lab of Process Equipment and Control (GK201817).

REFERENCES

[1] Liu Dawei, Ren Tingzhi, Jin Xin. Geometrical model and tooth analysis of undulating face gear [J].Mechanism and Machine Theory, 2014, 86, 2015: 140–155.

[2] Wang Kai, Wang Jinge, Deng Xingqiao,et al. Modal Analysis and Structural Optimization of End-face Meshing Pairs[J].Journal of Mechanical Transmission, 2017,41(06):30-35.

[3] Gao Qilin, Yang Bangcheng. Finite Element Modal Analysis of Worm Based on Workbench [J]. Value Engineering, 2017, 36(16): 204-206.

[4] Yang Yongming. Modal analysis of worm gear transmission performance based on finite element method [J].Electronic Science and Technology, 2016, 29(08):82-84+88.

[5] S. Solaleh, H. Mohammad, B. Pouya. Fabrication of cooling channels employing worm voids caused by friction stir based process: Considering cooling and fluid parameters [J].Journal of Manufacturing Processes, 2018, 35.

[6] J.Ren, R. Ahmed, H.Butt. Finite element analysis of nanosecond pulsed laser ablate-on of various materials [J]. World Journal of Engineering, 2017, 14(6).