ISSN: 2472-3703 DOI: 10.6911/WSRJ.201908_5(8).0002

Design of Intelligent Home System Based on Arduino

J.B. Du[1], Z.Y. Wu[1, a, *], C.W. Cai[1], H. Liu[1]

[1]Department of Electronics and Communication Engineering, Suzhou Institute of Industrial Technology, Suzhou 215104, China.

[a]wuzy@siit.edu.cn

Abstract

Since the birth of the concept of the Internet of Things, the application of the Internet of Things has gradually expanded. However, as an important application in the Internet of Things, real-time monitoring of home environment is still difficult to popularize. This is mainly due to the high price of real-time monitoring equipment and the obstacles of network transmission. In view of this, this paper designs a family environment monitoring product with low price and excellent performance. The design uses Arduino development board and LEWEI Internet of Things cloud platform to build a monitoring system. DHT11 and MQ-5 sensors are used to detect the temperature, humidity and natural gas concentration in the home respectively. Then the data collected are uploaded to the cloud platform by using Arduino development board and W5100 expansion board, and displayed on the mobile phone or computer end of the user. This design makes full use of the Internet of Things (IOT) cloud platform as a new tool. The product has the advantages of excellent performance and high precision, meets the needs of people for remote viewing of home environment quality, and has strong innovation and great application potential.

Keywords

Arduino; Intelligent home; Sensors.

1. INTRODUCTION

With the rapid development of society, the economic strength of our country has been gradually enhanced, and the living standards of people have been gradually improved. Because of the reform and opening up, a large number of foreign chemical enterprises have been introduced into China. This phenomenon has promoted the development of national industry, but also caused huge pollution to the environment. In this period of rapid industrial development, our attention has gradually shifted from economic development to their own living environment. A series of words such as "haze" and "pm2.5" have gradually been concerned by the general public, and the quality of family environment has also been paid attention to [1-2].

With the emergence of a large number of Internet of Things devices, people have a deeper understanding of the Internet of Things. The concept of "smart city" came into being, and the foundation of "smart city" is "smart home". "Smart Home" is to link home electronic devices to the main computer through the network, to manage the home intelligently and automatically. The traditional family environment measurement can not meet the needs of the current society, so it is necessary to introduce more intelligent and real-time monitoring products [3].

Nowadays, with the rapid development of social economy, a series of problems have arisen. A large number of children have to stay at home alone during the working day. Children's curiosity is very great, because they have a very low ability to distinguish things but like to try,

ISSN: 2472-3703 DOI: 10.6911/WSRJ.201908_5(8).0002

which brings them great danger. In recent years, there are often news that children cause gas explosion at home alone. While blaming those parents who have not fulfilled their duties, we think of designing a product for this accident. When gas leaks at home, we can inform parents about the status of the family environment through the Internet to reduce the occurrence of disasters [4-5].

In the past, people only depended on the sense of touch and smell to monitor the family environment. They did not know the temperature and humidity accurately. The requirement of air was limited to odor or not, and many harmful gases could not be monitored. With the development of science and technology, we gradually have a quantitative requirement for environmental detection. Thermometers, hygrometers and gas monitoring devices have emerged. But these devices can only detect the gas concentration when they detect the gas. There is no definite concept about whether they exceed the standard or not. Sometimes these devices exist only singly, and the degree of integration and intelligence is not high enough.

In recent years, with the development of the Internet of Things, some intelligent environmental monitoring products have emerged. These intelligent monitoring products have good accuracy and intelligence. However, because of the high price, they are mostly used in enterprise environment monitoring. For ordinary families, because of their high price, they cannot be popularized. For example, smart home products on the market now include smart humidifiers, smart air purifiers and so on. Although these products can achieve intelligent adjustment of the home environment, the price of assembling a system makes many ordinary families unable to pay [6].

In the near future, with the continuous development of science and technology, the cost of electronic components is decreasing. Family environmental monitoring will be paid more and more attention. The content of family environmental monitoring will become more intelligent, diversified and integrated. Every family can monitor and control the family environment remotely through handheld devices, and understand the family environment in real time. At the same time, users can measure a number of household environment data through handheld devices, and analyze and process the data intelligently. But at present, for most families, it is urgent to design a simple and inexpensive family environment monitoring system [7].

In this design, a simple Internet of Things (IOT) system will be built by a simple circuit, with a single chip computer as the core, using several sensors, so that users can obtain the information of home environment remotely through the network.

This paper designs a family environment monitoring product with low price and excellent performance. The design uses Arduino development board and LEWEI Internet of Things cloud platform to build a monitoring system. DHT11 and MQ-5 sensors are used to detect the temperature, humidity and natural gas concentration in the home respectively. Then the data collected are uploaded to the cloud platform by using Arduino development board and W5100 expansion board, and displayed on the mobile phone or computer end of the user. This design makes full use of the Internet of Things (IOT) cloud platform as a new tool. The product has the advantages of excellent performance and high precision, meets the needs of people for remote viewing of home environment quality, and has strong innovation and great application potential. Following is a detailed description of the design process and methods.

2. OVERVIEW OF DESIGN SCHEME

In order to achieve all the expected functional indicators of remote home environment monitoring, the project will connect the functional modules through the schematic block diagram in Figure 1. This system belongs to a multi-functional system, which can set the alarm upper and lower limits of temperature, humidity and natural gas concentration. When the temperature and humidity are not normal, the alarm information will be sent to LEWEI

ISSN: 2472-3703 DOI: 10.6911/WSRJ.201908_5(8).0002

platform through LEWEI, and when the natural gas concentration exceeds the normal value, the alarm information will also be sent to LEWEI platform through LEWEI.

This design is mainly used for modules: natural gas sensor module, temperature and humidity sensor module, Arduino development board, W5100 expansion board, Lewei platform.

The principle of the system is as follows: temperature and humidity sensors can convert temperature and humidity data into electrical signals, which are amplified by an amplifier, converted into digital signals by an internal analog-to-digital circuit and transmitted to a microcontroller. Natural gas sensors can detect the gas in the environment. The internal sensors can convert the gas concentration into electrical signals and transmit them to the analog input port of the microcontroller. Then, the Arduino development board transmits the received data through W5100 expansion board to the LEWEI platform, and the LEWEI platform judges the data, warning the data in the unsafe range.

3. INTRODUCTION OF HARDWARE MODULE

3.1. Introduction of Arduino

Arduino is a simple, flexible and easy-to-develop electronic design platform. It consists of hardware and software. It was developed in Europe in 2005.All parts of Arduino are open source, and the development team put Arduino& apos; s hardware design on the Internet. To maintain the open source concept of design, they use knowledge sharing (CC) authorization for hardware design. Under such authorization, everyone can copy circuit boards. The replicator does not have to pay any patent fees for the product or even obtain permission from the Arduino team. Arduino has been developed to date, and many models and derivative microcontroller boards have been launched.

Arduino& apos; s software is used to write special applications for development boards. Like development boards, Arduino& apos; s software is open source and free to users. Users can download these software online and write programs in the software using C++.After transferring the program to the development board, the program will prompt the operation method of the development board.

Compared with traditional MCU, Arduino has the following advantages:

(1) Openness: Arduino& apos; s hardware and software are totally open, and can be used and modified by anyone without being used for commercial purposes. This enables users to better understand Arduino& apos; s circuit principles and modify circuit boards according to their own needs.

(2) Simplicity: Arduino development board adopts the way of USB direct connection computer, without installing driver and burner. And Arduino development environment software is very simple, only the necessary toolbars in the menu without dazzling elements, even without looking at the manual can also achieve routine compilation and download.

(3) Rich third-party resources: Arduino is open source regardless of hardware and software, but also has a large number of third-party libraries. Many fans in the Arduino community will share their design hardware and software, where users can find the required library files and circuit wiring methods.

3.2. W5100Network Extension Board

W5100 Network Extension Board can make Arduino Development Board a simple Web server. Because of the superimposable design, it can be directly plugged into Arduino Development Board. The function of W5100 chip automatically acquires IP address, which has the advantages of high integration, high stability, high performance and low cost.

ISSN: 2472-3703 DOI: 10.6911/WSRJ.201908_5(8).0002

3.3. Temperature and Humidity Sensor Module

This design uses the temperature and humidity sensor module which can detect the temperature and humidity around the sensor. The sensor is dht11. The sensor is digital output, and the module circuit is shown in Figure 1.

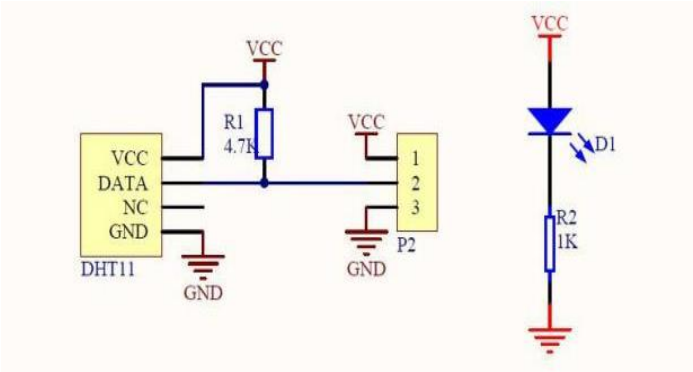

Figure 1. DHT11 module internal wiring diagram

DHT11 is a calibrated sensor for measuring temperature and humidity. It can measure the temperature error of 0 - 50 at about 2 and the humidity error of 20 - 90% RH at about 5%.

DHT11 has four pins, one pin (VCC) is the power pin 3-5.5 VDC, two pins (DATA) is the data output port, three pins (N/A) are empty, and four pins (GND) are grounded to terminate the negative power pole.

3.4. Natural Gas Module

The natural gas module used in this design uses MQ-5 natural gas sensor module. The sensor is MQ-5. The whole module consists of a MQ-5 module, a potentiometer, a LM358 double operational amplifier and several resistance LED beads.

The wiring diagram of MQ-5 module is shown in Figure 2. There are four pins in MQ-5 module, one pin (VCC) is used for 5V voltage port of power supply link MCU, two pins are level output, three pins are analog output and four are GND.

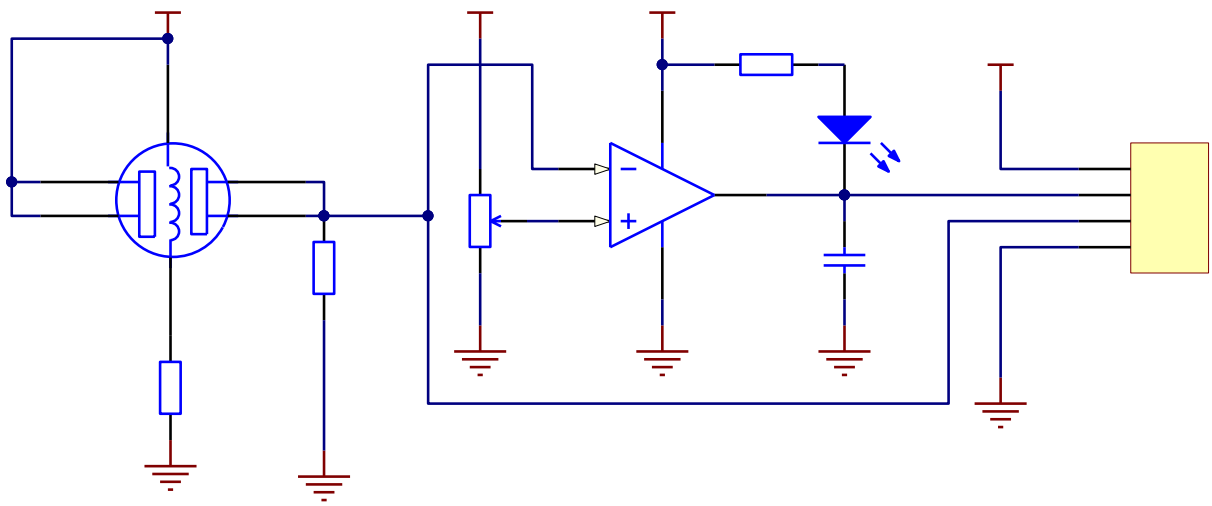

Figure 2. MQ-5 module wiring diagram

ISSN: 2472-3703 DOI: 10.6911/WSRJ.201908_5(8).0002

3.5. Brief Introduction of Lewei IOT Platform

LEWEI IoT Platform is a platform that can help users quickly realize the application of the Internet of Things. It was developed by Beijing LEWEI IoT Technology Company. Users can upload the data measured by sensors to the LEWEI platform through the network module, or control the connected devices through the platform. LEWEI platform provides storage, analysis and query services for users. The platform has Wechat public number. When users pay attention to it and bind it, they can observe the data measured by sensors through mobile phones, and at the same time they can receive alarm information.

4. DESIGN PROCESS

4.1. Network Platform Construction

First of all, we need to register an account on the platform of LEWEI Unionwealth of Things. Click Register on LEWEI Unionwealth official website, fill in the data activation according to the guidelines, and login with the registered username and password after the registration is completed. After login into the system, display my Internet of Things in the menu bar. Click "My Device" and select "Add New Device" to display the interface. The identification bar is the number of the device, which is automatically assigned by the system in the order of 01, 02 and 03. The corresponding identification number of the device will be used in the following programming. The type column is used to select the type of device. According to the different hardware of the device, it is divided into four categories: Arduino, lw-board, Art and others. Because this design uses the Arduino development board, the Arduino option is chosen here.

In terms of template selection, LEWEI provides users with five alternative templates and an option of "not using templates". The five templates are: three meters, HT, temperature and humidity + laser particle devicebit, carrier meter & GPRS meter and DLT meter. Because after selecting the template, the corresponding sensor will be created automatically, and the template and sensor information of the device can not be edited later, so the "no template" is chosen here. The name column refers to the name of the design. In the controllable column, if users need to control their devices with Lewei Wulian platform, check "Yes", then enter the API address, and vice versa check "No". In the column of whether to make it public, if you choose to make it public, other people can see the name of the users‘ device and the device information on the map of the LENET public device. Geographical location refers to selecting the location of user equipment on the map. Setting the above options in turn and clicking the "Save" button completes the creation process of the device.

Like adding devices, adding sensors is also under "My Material Federation". Clicking on "Sensor and Controller" in the left column can add two devices, one is the sensor, the other is the controller. Because the controller is not used in this design, the method of adding the controller will not be described in detail. This paper focuses on the method of adding sensors. Select Sensor List in Sensor and Controller list and New Sensor List. The "Add Sensors" page pops up. The logo here refers to the logo of sensors, which can be combined with letters and numbers. The logo can be used in programming. In the type column, you can drop down to select different sensor types. It should be emphasized that different types correspond to different units, such as depth M, humidity% and so on. Units are associated with types, and each type corresponds to a unit. If you choose "other types", you need to input units by yourself.

Device refers to the device to which the sensor is connected. Here we choose the device we created and fill in the name of the physical quantity to be measured by the sensor. The data measured by the sensor can be calibrated by numerical conversion, so the final stored data must satisfy the following conditions: display value = upload value * coefficient + offset. If the sensor does not need numerical conversion, then this part can not be filled in. The sensors filled in here

ISSN: 2472-3703 DOI: 10.6911/WSRJ.201908_5(8).0002

are generally mainly used in the sensor of instrument class. The picture part refers to the picture uploaded from the sensor.

In the column of whether or not to disclose the options, only when the device and sensor are simultaneously disclosed and satisfied, can other people see the information, data and pictures of the sensor of this project from the public device map. By setting the normal range, the normal value of indoor environment can be calibrated. If it deviates from this range, it can be considered that the indoor environment has exceeded the normal value. By checking "beyond range alarm" to send information alarm automatically when data deviates from normal value. In the introduction section, the sensor notes can be filled in. After filling in the above content, click "Save" to complete the sensor creation.

The alarm information mainly sets the notification group and the normal range of sensors. There are three main steps in setting up notification group: adding contacts, binding Wechat and adding notification group. First, enter the personal home page of LEWEI and click on "SMS Early Warning Management" and "My Address Book" in the menu list. Click New, fill in the corresponding data, and click Save after completion. Then we will automatically go back to the "My Address Book" interface, where we can find the contacts we just created. On the right side, there is the option of "View Binding Two-Dimensional Code". When clicked, a Binding Two-Dimensional Code will appear, which can be bound by scanning the two-Dimensional Code with a Wechat Sweep.

The establishment of a notification group can be achieved after the establishment of contacts and the binding of micro-communications. Under the menu list, select Notification Group Management, and under Notification Group Management, click Add Notification Group, fill in the name and introduction of Notification Group, and then select the contact person and tick the options that need to be notified. After the completion of click save, the establishment of notification group is completed. After the notification group was established, the sensor alarm was set up. First, click "My Material Federation", "Menu List", "Sensor and Controller" in turn. Click Edit after the corresponding sensor and fill in the normal range. Then select the notification group in the alarm. When the sensor value is not within the normal range, the notification will be received.

4.2. Hardware Construction

The hardware used in this design includes Arduino UNO R3 development board, W5100 Ethernet expansion board, DHT11 temperature and humidity sensor module and MQ-5 natural gas sensor module. Arduino UNO R3 development board has six analog input pins (A0-A5) and 14 digital input and output pins (0-13) and six power supplies. W5100 Ethernet Extension Board is installed directly on Arduino UNO R3 Development Board, as shown in Figure 3.

Figure 3. Arduno UNO R3 and W5100 Ethernet extension plate connection object graph

ISSN: 2472-3703 DOI: 10.6911/WSRJ.201908_5(8).0002

DHT11 temperature and humidity sensor and MQ-5 natural gas sensor is placed on breadboard and connected with microcontroller by wire. DHT11 temperature and humidity sensor module connects data foot 2 development board I/O port 2 foot according to the connection method mentioned in the sensor; MQ-5 gas sensor module 1 foot connects 3 foot idle, 4 foot development board analog input A0 foot according to the connection power mentioned above. After the connection is completed, the development board is connected to the computer through USB, and the W5100 Ethernet expansion board is connected to the router through the network line. Then the sensor data can be monitored through the network platform through the computer burning program.

The DHT11 temperature and humidity sensor is connected to the MCU as shown in Figure 4. The DATA foot of the DHT11 sensor is connected to the P2 foot of the MCU through a pull-up resistance of 4.7K.

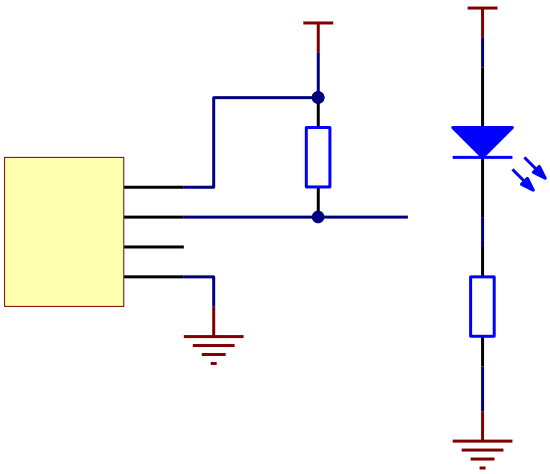

Figure 4. DHT11 Sensor Circuit Connection Principle

MQ-5 natural gas sensor module is connected with single chip computer as shown in Fig. 5. The 1.2.3 foot of MQ-5 sensor is connected with the positive pole of the power supply, 5 feet are grounded, 4 feet and 6 feet are used as the output terminal of the signal. It connects directly to analog output and through LM358 to high and low level output.

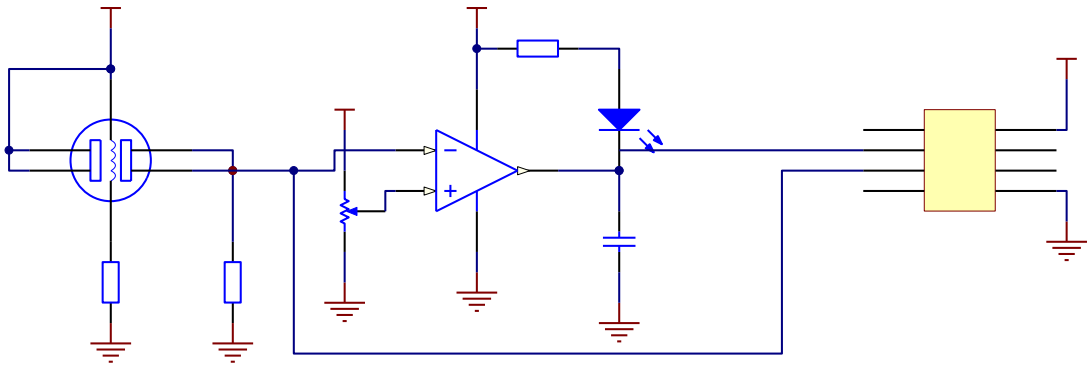

Figure 5. MQ-5 Circuit Connection Principle of Natural Gas Sensor

4.3. Programming

Arduino programs are written mainly by calling library files, which can greatly reduce the programming time. This design uses four library files: LeweiClient, SPI, Ethernet and dht11. The

ISSN: 2472-3703 DOI: 10.6911/WSRJ.201908_5(8).0002

two library files, SPI and Ethernet, are Arduino' s official library files, and LeweiClient and DHT11 are third-party libraries. Third-party libraries need to be downloaded and installed by themselves. The following is a brief description of the installation method of third-party libraries on the installation of LeweiClient.

Since the Aduino Library of Le Networks is hosted on other websites, it needs to be downloaded from the website at https://github.com/lewei50/leweiclient.After decompressing the downloaded compressed package into the Library folder under the folder where the programming software is located, the installation of the third-party library has been completed.

When the library file is installed, the program begins to write. First, open the Arduino IDE and select "file-example-leweiclient-append_send", then modify it, then call the DHT11 library file, and then define the DHT11 data input pin.

Define LW_USERKEY "xxxxxxxxxxxxxxxxxxxxxxxxxxxxxxxxxx"

Define LW_GATEWAY "01"

These two lines of code should be entered in colon respectively user USERKEY and device identification of LENET. USERKEY is set in personal information of LENET's account. Device identification is mentioned above (here is 01, if the setting is 01, there is no need to change).

Int sensorReading = analogRead (A0);

Delay (150);

These two lines of code read A0 foot data, because MQ-5 is analog output, so the microcontroller read directly.

LWC - > append ("T1", temp_c);

LWC - > append ("H1", humidity);

LWC - > append ("G1", sensorReading);

The above three lines of code assign values to the sensor identification, which is mentioned above, where the identification in the colon should be changed to its own setting.

5. DESIGN OF PHYSICAL DEBUGGING AND TESTING

The main core of this design is the network expansion board. Whether the network expansion board works properly or not, the debugging of the network expansion board is divided into two steps. The first step is to see whether the expansion board can obtain dynamic IPHTTP through burning the corresponding program and output it through serial port. The second step is to burn the corresponding program to see whether the expansion board can publish a simple web page in the LAN. After the above debugging, the expansion board has achieved the desired results, and the debugging is normal.

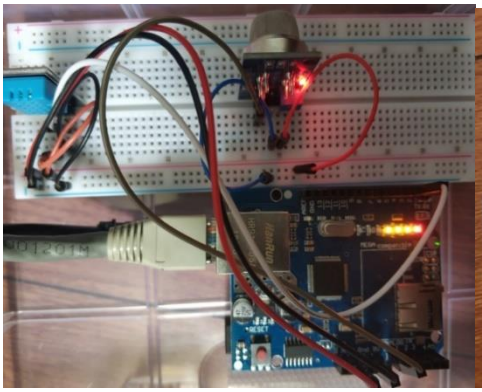

Figure 6. Real pho

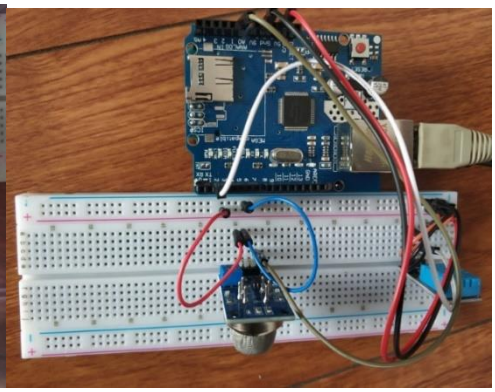

Figure 7. The runtime picture

ISSN: 2472-3703 DOI: 10.6911/WSRJ.201908_5(8).0002

Through the joint design of hardware and software and the gradual debugging, the design of home environment monitoring system based on Aduino is finally realized. The design of physical photos is shown in Fig. 6, and the running design state is shown in Fig. 7. The equipment should be placed in a relatively open place at home to avoid too much data error caused by direct sunlight. When power is on, the power indicator on the network extension will be lit. After the network connection, "LINK" will light up, transmission will flicker. COLL flickers when network conflicts occur. The MQ-5 module will have a red light when it works normally and a green light when it detects natural gas.

The data of one week monitoring in the family is shown in Fig. 8, in which we can clearly see the changing curve of the family environment. The data transmission interval is one minute, and the measured data will be uploaded to the network every minute. The error temperature of the data is within the range of the error of the DHT11 sensor at about one degree. Several abnormal data in the data belong to the test, and the data accuracy is relatively high.

Figure 8. Home monitoring data in a week

6. CONCLUSIONS

This design is a remote home environment monitoring system based on Arduino. With the help of the existing Internet of Things platform and single-chip computer, a simple and inexpensive Internet of Things monitoring equipment is made to realize real-time monitoring of the home environment and alarm for natural gas leakage. The Arduino development board is selected as the main control part. The temperature and humidity sensor is used to collect the environmental temperature and humidity, and the natural gas sensor is used to collect the natural gas concentration. The data is transmitted to the network by the Ethernet expansion board. The work completed in this design includes the following points: (1) Sensors DHT11 and MQ-5 collect and transmit the temperature, humidity and natural gas concentration of the home environment to the single chip computer. (2) MCU processes the data from sensors and uploads the integrated data to the Internet of Things platform through the network expansion board. (3) The Internet of Things (IOT) platform displays the obtained data and decides whether to alarm the data in different scope.

Through the process of design and construction and the display of design results, we can see that this paper has basically achieved the purpose of design, with high accuracy and good performance, suitable for large-scale promotion.

ISSN: 2472-3703 DOI: 10.6911/WSRJ.201908_5(8).0002

ACKNOWLEDGEMENTS

This study was supported by College Project of SIIT (SGYKJ201711, 2017kyqd011) and Project of Philosophy and Social Science Research in Colleges and Universities of Jiangsu Province (2018SJA1456).

REFERENCES

[1] Chen Luzhou. Arduino Programming Basis (2nd Edition) [M]. Beijing: Beijing University of Aeronautics and Astronautics Press, 2015.

[2] Wang Xiujuan. Design and implementation of home environment controller based on human comfort [J]. Jiangsu: Nanjing University of Technology.

[3] Huang Zhuo, Zhang Yue, Liu Jiwen. See how the witty cloud Huang Zhuo "sells water" in the era of intelligent hardware [J]. Zhongguancun, 2014 (9): 52-55.

[4] Zhu Dongmei. Internet company breaks into intelligent home [J]. Modern household appliances, 2015 (12): 54-55.

[5] Li Mingliang. Arduino Project DIY [M]. Beijing: Tsinghua University Press, 2015:3-4.

[6] Principle and Application of Cai Ruiyan. Arduino [J]. Electronic Design Engineering, 2012, 20 (16): 155-157.

[7] Fu Wei, Yang Xinyu, Gong Li, Zhang Jizhu, Luo Chun. Design and implementation of Internet of Things home environment monitoring based on Aduino+Yeelink platform [J]. Innovation and application of science and technology, 2017 (31): 17-18.