ISSN: 2472-3703 DOI: 10.6911/WSRJ.201909_5(9).0029

Design and Application of Non-Contact Switch

Yuntao Zhang[1, a], Yucheng Zhou[1, b], Sihan Yu[1, c], Zihui Tang[1, d], Jiahao Zhang[1, e]

[1]Department of Mechanics, Nanjing tech University, China

[a]1052238091@qq.com, [b]2570451808@qq.com, [c]542406080@qq.com, [d]2320590971@qq.com, [e]1592987896@qq.com

Abstract

Considering the application direction of the non-contact switch (group), it is necessary to compare and select three types of sensors: ultrasonic, infrared, and capacitance. Through the specific comparison of module size, measurement accuracy, modification difficulty and debugging difficulty, it is found that the non-contact scheme with infrared and ultrasonic as the core has a large limitation, and it is unable to provide relatively fine signal acquisition. Therefore, mutual capacitance is selected. The sensor is implemented as a contactless switch. In daily life and practical applications, there are quite a few scenes that need to provide non-contact signal acquisition, such as the health of the button in a crowded elevator; the switch operation of the door lock of a public toilet. Due to its use characteristics, the current mainstream contact solutions are lacking in hygienic properties, and the existing non-contact solutions such as infrared are limited and cannot provide relatively fine signal acquisition. The new mutual capacitance scheme can be used to develop the front-end signal acquisition of non-contact operation by sensing the change of the overall capacitance value formed by the surrounding environment and the sensor, and due to its own characteristics, complicated equipment without infrared or acoustic wave schemes It can be more conducive to miniaturization and modular production development.

Keywords

Capacitive sensor, Delayed response, non-contact.

1. INTRODUCTION

The first-level discipline of this project is mechanics. We are committed to the design and application of non-contact switches (buttons), and try to move towards real-world applications. This project is based on contact and different mechanical sensors, which will require buttons or switches. The concept of contact is increased to non-contact or micro-contact. The idea is to use a capacitive sensor or the like to study the sensor with extremely high conductivity of the contact and place it under the background of a public place application.

2. THE DESIGN PRINCIPLE

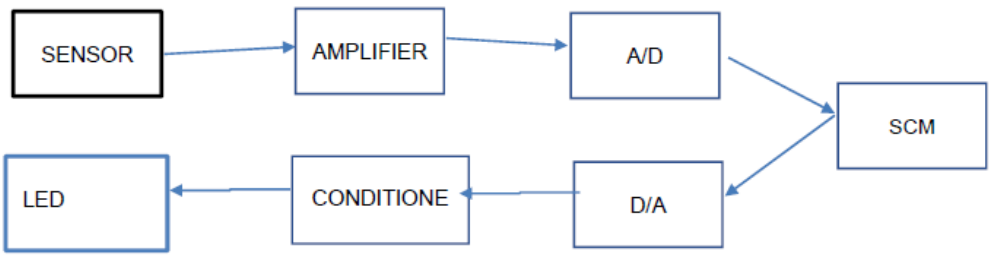

ISSN: 2472-3703 DOI: 10.6911/WSRJ.201909_5(9).0029

Due to the integration of the microcontroller and its output signal limitations, we made further changes, and the effect display that is more suitable for our project.

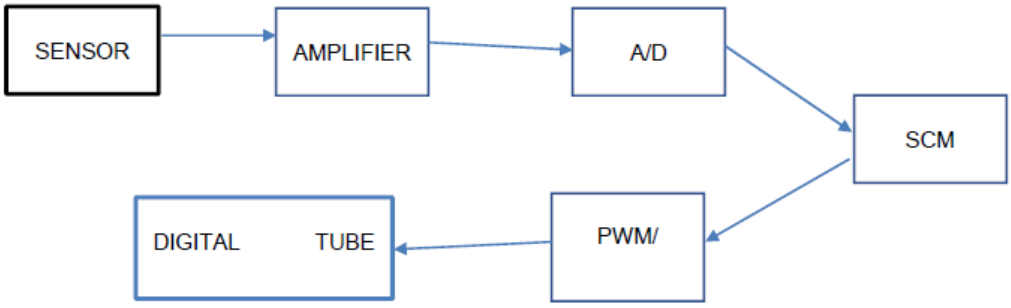

3. SOFTWARE AND HARDWARE DESIGN

3.1. Hardware Design

The intelligent non-contact liquid level sensor adopts advanced signal processing technology and high-speed signal processing chip, which breaks through the influence of the wall thickness of the container and realizes the non-contact detection of the liquid level in the closed container. Easy to install and easy to use. The liquid level of various toxic substances, strong acids, strong alkalis and various liquids in the high-pressure closed container can be detected. Equipped with the XH2.54 adapter board, the sensor sensitivity can be switched by clicking the setting button. A total of four gear positions are available for cyclic conversion. It can directly collect digital signals and connect directly to Arduino or other main controllers.

HX711 is a 24-bit A/D converter chip designed for high-precision load cells. Compared with other chips of the same type, the chip integrates peripheral circuits required by other types of chips including a regulated power supply and an on-chip clock oscillator, and has the advantages of high integration, fast response, and strong anti-interference. The overall machine cost of the electronic scale is reduced, and the performance and reliability of the whole machine are improved.

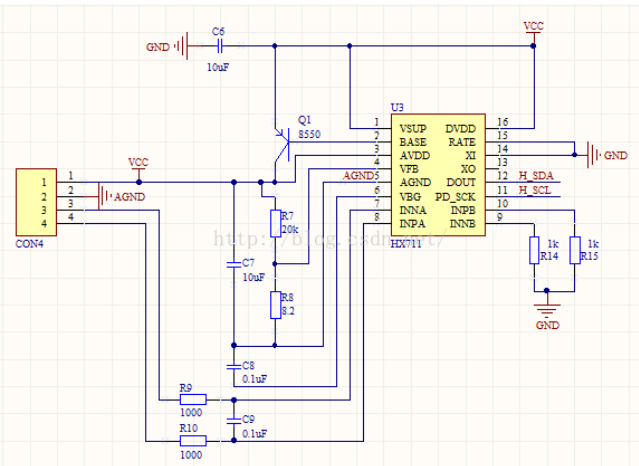

Fig 1. HX711 Module schematic

Microcontrollers (Microcontrollers) are integrated circuit chips that use VLSI technology to centralize CPUs with data processing capabilities, random access memory RAM, read-only memory ROM, various I/O ports and interrupt systems, and timers. A small and complete microcomputer system, such as a counter/counter integrated into a piece of silicon, is widely

ISSN: 2472-3703 DOI: 10.6911/WSRJ.201909_5(9).0029

used in industrial control. From the 1980s, from the then 4-bit, 8-bit microcontroller, to the current 300M high-speed microcontroller.

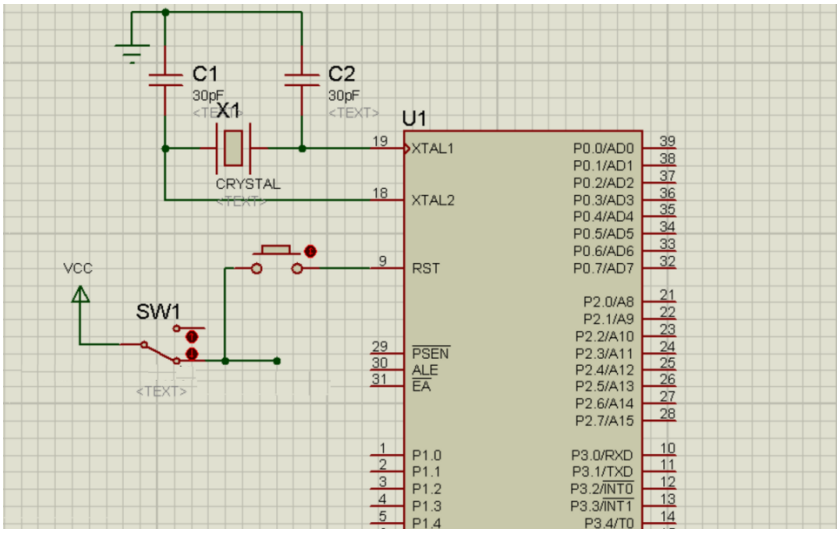

Fig 2. 51 Microcomputer; (STC89C52)

An operational amplifier is a circuit unit with a very high amplification factor. In the actual circuit, usually combined with the feedback network to form a certain functional module. It is an amplifier with a special coupling circuit and feedback. The output signal can be the result of mathematical operations such as input signal addition, subtraction or differentiation, integration, and the like. The use of ideal op amps in circuit design far exceeds the calculation of addition, subtraction, multiplication, and division. Today's op amps, whether using transistors or vacuum tubes, discrete components or integrated circuit components, the performance of op amps has gradually approached the requirements of ideal op amps. Early operational amplifiers used vacuum tube designs, and currently most are integrated circuit components.

However, if the system's demand for amplifiers exceeds the requirements of integrated circuit amplifiers, discrete components are often used to implement these special-purpose operational amplifiers. The most familiar and used audio processing circuit used by people is the ordinary operational amplifier. The op amp can generally be viewed simply as a high-gain direct-coupled voltage amplifying unit with one signal output port and two in-phase, inverting, high-impedance inputs, so op amps can be used to make in-phase, inverting, and differential amplifiers.

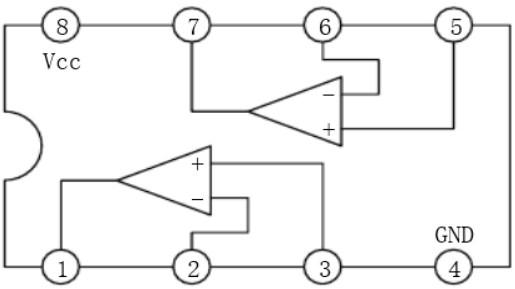

Fig 3. Internal circuit of operational amplifier

ISSN: 2472-3703 DOI: 10.6911/WSRJ.201909_5(9).0029

The power amplifier plays a pivotal role of "organization and coordination" in the entire sound system, and to some extent dominates whether the entire system can provide good sound quality output. It uses the current control of the triode or the voltage control of the FET to convert the power of the power supply into a current that varies according to the input signal. Because the sound is a wave of different amplitude and different frequency, that is, the AC signal current, the collector current of the triode is always β times the base current, and β is the AC amplification factor of the triode. If this is used, if a small signal is injected into the base, Then, the current flowing through the collector will be equal to β times of the base current, and then the signal is isolated by a DC blocking capacitor, and the current (or voltage) is a large signal of the original β times, which becomes a magnification of the triode. effect. After continuous current amplification, power amplification is completed.

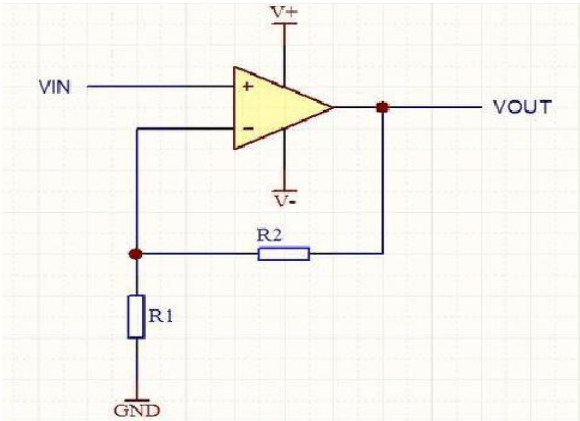

Fig 4. Power amplifier circuit diagram

3.2. Software Design

We are using Keil Vision4 software and PZ-ISP software to burn program. We have written program instructions for dot matrix, static digital tube, dynamic digital tube, XPT2046.c and main function. Due to space limitations, we will not be detailed for those.

4. PROJECT IMPLEMENTATION

4.1. Previous Research to Determine the Direction of Sensor Application

Considering the application direction of the non-contact switch (group), it is necessary to compare and select three types of sensors: ultrasonic, infrared, and capacitance. Through the specific comparison of module size, measurement accuracy, modification difficulty and debugging difficulty, it is found that the non-contact scheme with infrared and ultrasonic as the core has a large limitation, and it is unable to provide relatively fine signal acquisition. Therefore, mutual capacitance is selected. The sensor is implemented as a contactless switch.

4.2. Mutual Capacitance Research and Sensor Total Circuit Design and Production

4.2.1 basic line construction

Soldering of sensor lines: The DuPont line is used to extend the soldering of the red, green, and white lines of the sensor to facilitate subsequent connection with the MCU and motor.

Welding of the power line: Using a conventional triangular power plug, strip the weldable red, yellow and green wires with a wire stripper and scissors, and solder the copper piece to the motor terminal.

4.2.2 single chip simulation test

ISSN: 2472-3703 DOI: 10.6911/WSRJ.201909_5(9).0029

The MCU development board is connected to the PC, and the PZ-ISP software burning program is used to download the program test. The dynamic digital tube test, the static digital tube test, and the A/D test are successively performed to ensure that the line is tested without errors. Connect the sensor to the motor and A/D, set up the operational amplifier, connect to the MCU development board, connect the MCU development board to the PC, and use the PZ-ISP software programming program to perform external input AD value test. Through the analysis of the test results, the op amp is tested and selected, and finally the LM358 operational amplifier is used. The sensor is completely tested again and the test is successful. At this point, the input channel is constructed. At the same time, for the case of sufficient voltage and insufficient current, try to use the triode to amplify the current as a power amplifier, and use the ULN2003 bipolar linear integrated circuit chip. After debugging, the output channel is constructed.

At this time, the induction test is performed by the single-chip programming program, and the data output is good, and the mutual-capacitive non-contact switch is prototyped.

4.3. Actual Simulation Test

Purchasing simple automatic door locks and LED induction lamps, connecting and debugging with capacitive non-contact switch prototype lines, performing inductive testing, sensitivity meets available requirements, and signal acquisition is successful, mutual capacitive non-contact switches have practical application value.

5. INNOVATION POINTS AND CHARACTERISTICS

In daily life and practical applications, there are quite a few scenes that need to provide non-contact signal acquisition, such as the health of the button in a crowded elevator; the switch operation of the door lock of a public toilet. Due to its use characteristics, the current mainstream contact solutions are lacking in hygienic properties, and the existing non-contact solutions such as infrared are limited and cannot provide relatively fine signal acquisition.

The new mutual capacitance scheme can be used to develop the front-end signal acquisition of non-contact operation by sensing the change of the overall capacitance value formed by the surrounding environment and the sensor, and due to its own characteristics, complicated equipment without infrared or acoustic wave schemes It can be more conducive to miniaturization and modular production development.

6. CONCLUSION

The first problem encountered in our production engineering is the accuracy of the capacitive sensor, that is, it is impossible to know exactly how far the distance sensor is to react. And one problem that comes with our project is the problem of mis-touching. If applied to life, mis-touching is a big trouble, and it can't realize the corresponding function according to people's wishes. On the contrary, there will be unexpected difficulties, and due to the accuracy of the sensor, sometimes the contact is poor and no signal affects the experience.

We hope to have access to higher, more accurate instruments in the future, so that this problem can be extended, for example, to make it more responsive and to make the device more commercially or to live. Or the input can be further expanded, not limited to non-contact or capacitive sensors, and more sophisticated sensors and measurement and control equipment can be used to perfect this topic!

REFERENCES

[1] Harald Philipp. Capacitive sensor and array. US6452514B1.[18 Sep 2018]

ISSN: 2472-3703 DOI: 10.6911/WSRJ.201909_5(9).0029

[2] Barrett J, Kirk S.Running focus groups with elderly and disabled elderly participants [J]. Applied Ergonomics. 2000(6): 621-629.

[3] Abdul Rheem. An opinion survey of caregivers concerning caring for the elderly in metropolis [J]. Public Health.2005(12): 1138-1144.

[4] Mary Zajicek,Stephen Brewster. Design principles to support older adult[J]. UAIS.2004(7): 148-156.

[5] Keio Univ, Fujisawa. Needs of the elderly for "elderly-aiming" products: From the view of technology[J]. Consumer Electronics. 2009(13): 378-381.

[6] ELNEC Bee Prog2 Device Programmmers user's Manual[M] .ELNEC s.r.o 2010 ,37/137.

[7] Nordic n RF24LE1 Production Specification v1.6 [M]. Nordic Semiconductor 2010.08 02-23.