World Scientific Research Journal Volume 7 Issue 10, 2021
ISSN: 2472-3703 DOI: 10.6911/WSRJ.202110_7(10).0013

On the Training Practice of Digital Talents Based on ERP Simulation Enterprise

Yanwu Wang
Xi'an Eurasia University, Xi'an, China

Abstract

China has now entered the digital economy era, information level has become an important indicator to measure the comprehensive strength of a country and region. Colleges and universities have become the key link in the cultivation of digital talents. In order to solve the problem of lack of digital management talents in enterprises, colleges and universities adopt practical teaching course design to simulate the actual business process of enterprises, so as to help students carry out ERP enterprise management practice, train the students' ability of information management, and transfer the talents for the digital transformation of enterprises.

Keywords

Digitalization; Talent Cultivation; Practice Teaching.

1. INTRODUCTION

With the high-speed operation of information age, information system, Internet and high-tech have got unprecedented development, enterprise management has entered the digital age.Large companies and large groups tend to follow the rapid development of enterprises, large scale, personnel, management is not in place, information island and other "enterprise disease." Facing this situation, enterprises need not only advanced management idea and management method, but also modern and digital control means and tools.Therefore, if enterprises want to change, achieve the expected market share and economic benefits, enterprises are more willing to carry out digital reform.

The world economy is in the transition period now, our country has entered the digital economy era.During the 14th Five-Year Plan period, the digital transformation has become a new situation of enterprise transformation.In the post-epidemic period, in order to maintain the sustainable development of enterprises, enterprises need to be more intelligent management.In order to be able to carry out the digital transformation smoothly, enterprises begin to adopt new technologies such as big data, cloud computing, internet of things, artificial intelligence, so as to achieve the goal and efficiency of cost reduction.

At the beginning of 2020, because of the influence of the coronavirus epidemic situation, many enterprises are under various pressure in the production and operation activities, and even face the risk of work stoppage and production stoppage.In this epidemic situation, the enterprises in the front of digital transformation are relatively less affected by the epidemic situation, and the speed of returning to normal operation is faster.Therefore, more and more enterprises are aware of the advantages of enterprise digital.In the process of digitalization transformation, digitalization and informationization are the same root, the digitalization of enterprises can not be separated from informationization, if there is no perfect deployment of informationization, it can not achieve digital transformation.Therefore, whether in the information era or the digital era, ERP still as the mainstream software by the big enterprises.

ISSN: 2472-3703 DOI: 10.6911/WSRJ.202110_7(10).0013

2. ANALYSIS OF DIGITIZATION TRANSFORMATION OF ENTERPRISES

2.1. Political Environment

At present, China's digital construction has entered a new stage of rapid development.In recent years, the national level has promulgated and formulated the National Strategy Outline of Informatization Development, the National Information Planning of the 13th Five-Year Plan, the 14th Five-Year Plan to accelerate the development of digital China.

The Outline of the National Strategy for the Development of Informationization proposes that:to strengthen the capacity of the development of informatization, it is necessary to " the core technology, strengthen the information industry", "consolidate the infrastructure and strengthen the universal service", "to develop the information resources, release the digital dividend", "to optimize the personnel and improve the information skills", "to deepen cooperation and exchange and expand the development space".

To realize the goal of "mizing talents and improving information skills", we need to strengthen the construction of professional talents.Establish a training system of information technology professionals based on higher vocational education and supplemented by continuing education.Provide information technology application program in general undergraduate and vocational colleges, promote the training of command talents, establish the training base of information technology talents, and support the joint development with foreign universities.

2.2. Economic Environment

From 2011 to 2020, the development of ERP industry in our country gradually accelerated, and the market scope gradually increased.At the beginning of 2020, the income of ERP industry in our country has reached 6.31 trillion yuan, the market is running well, the income keeps growing rapidly and the number of employees increases steadily, the industry has accelerated to high-quality development, the structure continues to adjust and optimize, the new growth point will emerge continuously, the ability to service and support the construction of two powerful countries will be enhanced significantly, which is becoming an important driving factor for the development of digital economy and the evolution of smart society

According to the survey, 37 per cent of companies with 100-499 employees use ERP; 11 per cent of companies with 500-999 employees use ERP; 33 per cent of companies with more than 1, 000 employees use ERP.Compared with 2009, the application of ERP in 2020 is more widely used not only in large enterprises but also in small and medium-sized enterprises with 100-499 people.Therefore, small and medium-sized enterprises gradually become the mainstream of information application.Small and medium-sized enterprises value informatization, which will also provide more opportunities for ERP suppliers.In the next two years, China's ERP market will grow steadily at a combined annual growth rate of 17.5 per cent; by 2023, the domestic ERP market will reach 153.24 trillion yuan.

2.3. Technical Environment

With the increasing influence of science and technology on the development of enterprises, the enterprises at present pay more attention to the development and application of new technologies than before, and understand that only the effective use of new technologies in production will bring obvious benefits; on the contrary, if the new technologies cannot be developed or owned in time, the enterprises will probably be eliminated in the industry change.

From the original single computer processing system, to the later client/server mode, to the later Internet service, to the current cloud service era, the computer as an important information processing tool, the application of the continuous expansion, and more development possibilities.

ISSN: 2472-3703 DOI: 10.6911/WSRJ.202110_7(10).0013

2.4. Social and Cultural Environment

At present, inflation makes the labor cost of our country rise year by year.In addition, China is gradually entering the elderly society, and with the appearance of Lewis inflection point, our demographic dividend will begin to disappear.Future labor costs continue to rise is a big probability event.Rising labor costs will severely squeeze the margins of the business.How to reduce cost and improve efficiency is paid more and more attention by managers.There are two ways to reduce cost and improve efficiency, one is to replace labor with capital and improve mechanization level, the other is to improve labor efficiency through the design of management organization model.Both of these methods need to improve the level of enterprise information management, enterprise information investment will start to accelerate.

3. DIGITIZED TALENT CULTIVATION NEEDS

With the economic globalization and the arrival of knowledge economy, human resources attract the great attention of enterprise development, because they play an important role in economic growth.In order to seize development opportunities, many countries and regions have tailored their development strategies, and human resources development, attraction and utilization play an important role in development strategies.In order to speed up the development of China's manufacturing industry and change from a big manufacturing country to a strong manufacturing country, it is necessary to realize the strategic deployment of information technology to drive the revival of manufacturing industry.

At present, however, the supply and demand of digital management talents in China are not matched, and the cultivation of talents cannot be effectively linked with the market demand.At present, the domestic market employment demand and education supply can not be effectively linked, and there are many gaps.Many graduates cannot find satisfactory jobs, but many companies lack talent.The basic reason is that the cultivation of digital management talents can not meet the needs of the rapid development of the industry, and the cultivation of academic education talents can not meet the needs of the market.

In the digital economy era, the demand for talent is no longer limited to one form.It is necessary to have the flexibility to apply a series of solutions to the problems encountered in the field, which requires that colleges and universities can reform the existing teaching methods, make full use of the advantages of advanced teaching methods and provide more effective solutions.In the classroom, arouse students'interest in learning, exert their greatest potential, connect the knowledge and reality, and bring their creativity into full play.Not affiliated with traditional teaching methods.The advantages of colleges and universities are to keep pace with the times, to improve teaching methods constantly, to enable students to keep up with the development of the times, and to allow students to use different methods flexibly in the actual teaching process to motivate themselves, to lay a solid foundation for their study and future.

With the advent of the digital economy era, society has put forward higher requirements for talents.College education is the most important part of talent training.Colleges and universities need to give full play to their advantages, strengthen the training of students, help students to adapt to social work quickly.

4. ERP SIMULATION ENTERPRISE CURRICULUM DESIGN

4.1. Introduction of Simulation Enterprise

The production of simulation enterprise comes from ordinary enterprise, it is people according to the operation mode and internal and external environment of entity enterprise, try to simulate all kinds of fixed factors and variables in simulation, so that it can reach infinitely

ISSN: 2472-3703 DOI: 10.6911/WSRJ.202110_7(10).0013

close to the activity of entity enterprise.Therefore, simulation enterprises have the same characteristics as ordinary enterprises:

(1) Institutional integrity. Simulated enterprises have production, sales, market, finance, human resources, after-sales service and other parts, and the modern SME system is basically consistent, can let the experimenter understand the real enterprise in different departments of responsibility and authority.

(2) Complete business process. Simulation business process as shown in Figure 1.

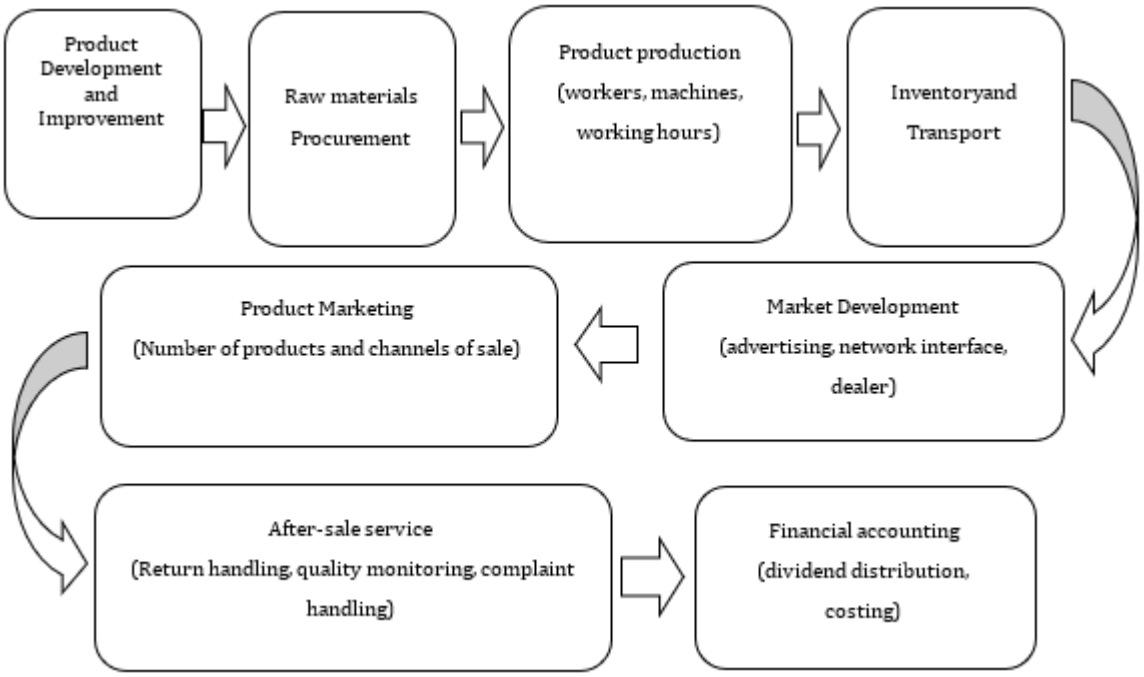

Figure 1. Simulation business flow chart

(3) A diversified market environment.In the process of simulation enterprise production and operation, the teachers provide the international financial information, the market share of the enterprise and the market condition of the competitors according to the simulation enterprise operation condition, which is in accordance with the real enterprise operation condition.

4.2. The Layout Design of Laboratory Space

As shown in the layout of the ERP lab in Figure 2, there are 8 simulation enterprises, a total of 48 participants.In this laboratory, each of the simulation enterprises has a barrier between them, so that each simulation enterprise can have a relatively independent area.The design style of location is to show the layout of the position in the enterprise, so that students can have the experience of working in the enterprise

4.3. ERP Simulation Enterprise Course Design

Through the training course, the class members are divided into groups of 6 members each. In the course, each member plays the roles of finance, sale, purchase, generation, warehousing, quality management, etc. The lecturer area is the supplier area, and the teacher is the supplier, which provides raw materials for each simulation enterprise. Through the common enterprise simulation operation, ERP operation and actual business combination, from the beginning to let each member cooperate with each other familiar with each module content to later can let each member familiar with the basic operation of ERP software.

ISSN: 2472-3703 DOI: 10.6911/WSRJ.202110_7(10).0013

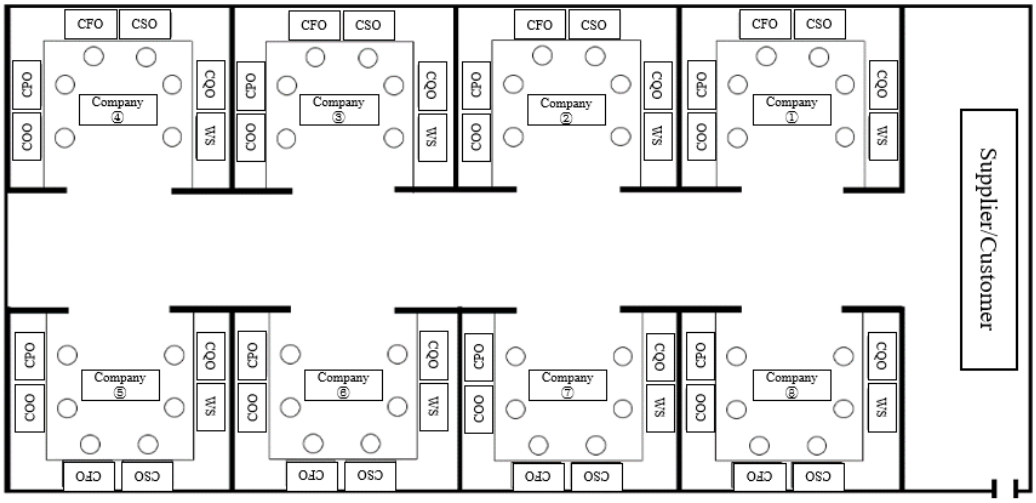

Figure 2. Layout Map of ERP Lab

(1) Background design

The company is modeled on a toy assembly company that has seven departments and is run by the company's most powerful department.The company's best-selling product is toy aircraft, which accounts for 80%of the company's total sales.The company's main customers from Beijing, Shanghai, Shaanxi, Henan and some scattered customers, its production raw materials rely on factory parts outsourcing and direct procurement.

(2) Organization architecture design

The company adopts flat organizational structure management, divided into 7 departments.The general manager manages the rest of the company, sales, procurement, production, quality management, warehousing and other departments responsible for the normal operation of the day-to-day business, finance department responsible for internal capital flow and audit.

(3) Product design

The toy plane is one of the company's best-selling products, as shown in the toy plane assembly diagram in Figure 3. The toy aircraft is mainly assembled through a variety of components, enterprise ERP operation process involved in the products are taken as an example.

Figure 3. Toy aircraft assembly diagram

ISSN: 2472-3703 DOI: 10.6911/WSRJ.202110_7(10).0013

5. THE DIFFERENCE BETWEEN SIMULATED ENTERPRISES AND REAL ENTERPRISES

In the real enterprise operation process, more or less there are some unexpected causes.For example, factors such as war, financial crisis, natural disasters, man-made effects, etc.are not simulated and predicted by the system, much less in the form of data.Therefore, most simulation enterprises have some unique differences from real enterprises.

(1) Enterprise decision-making is rapid

As the simulation enterprise is a pre-set practical teaching system, when each group of students through ERP software to make business management decisions, we can quickly draw conclusions and shorten the display time of decision effectiveness.In the short-term training of managers in enterprises, or economic management students in the field of experiment has a greater advantage than real enterprises.

(2) High risk zero cost

Analog decision makers take the risk of bankruptcy, but they don't have to pay any price.This high-risk zero-cost model, which allows both decision makers to take it seriously and more people to participate, is one of the strengths applied to training and teaching.

(3) The Business is merciless

The simulation enterprise can operate well, mainly has the computer in the background to operate.The company's operations will not be affected by any emotional factors, so it is called"heartless".Enterprises are in a completely fair market environment, which is one of the most contradictory places to the Chinese enterprise environment.In China and all over the world, the production and operation process of enterprises is more or less mixed with human relations, personal preferences and other emotional factors.Therefore, this is also a simulation enterprise in the hitherto not perfect details.

6. SUMMARY

Through the analysis of the development, social demand and policy of ERP industry, it is found that there is great demand for digital talents in China.ERP software is an important software for enterprises to deploy digitally.There are more and more colleges and universities in China to develop relevant majors.

In order to make the content of ERP simulation enterprise more operable, the background information is designed and the training is carried out from parameter configuration, purchase management, production management, sales management, etc.It can make the students conduct the ERP module in the enterprise operation, meet the need of enterprise digital transformation construction, and promote the process of enterprise digital transformation.

ACKNOWLEDGMENTS

Fund project: Key course "Business Case Practice", Xi'an Eurasia University (Project No.2019KC024);

Xi'an Eurasia University's scientific research fund project "Research on the Ecological Governance System of Higher Education Data under the Vision of Wise Campus-Taking Xi'an Eurasia University as an example"(Project No.2021XJSK12).

REFERENCES

[1] Karoliina Nisula;Samuli Pekkola ERP based business learning environment as a boundary infrastructure in business learning [j] Education and Information Technologies, 2019.

ISSN: 2472-3703 DOI: 10.6911/WSRJ.202110_7(10).0013

[2] Seethamraju, Ravi. Enhancing Student Learning of Enterprise Integration and Business Process Orientation through an ERP Business Simulation Game[J]. Journal of Information Systems Education, 2011, 22(1).

[3] Deranek, McLeod, Schmidt ERP Simulation Effects on Knowledge and Attitudes of Experienced Users[J] Journal of Computer Information Systems, 2019, 59(4).

[4] Schöbel Sofia,Saqr Mohammed,Janson Andreas. Two decades of game concepts in digital learning environments – A bibliometric study and research agenda[J]. Computers & Education, 2021, 173.

[5] Meghna Chhabra,Rohail Hassan,Amjad Shamim. Entrepreneurship and Big Data:The Digital Revolution[M].CRC Press:2021-08-12.